NEVADA 5 DRAWER LOW WARDROBE

ASSEMBLY INSTRUCTIONS

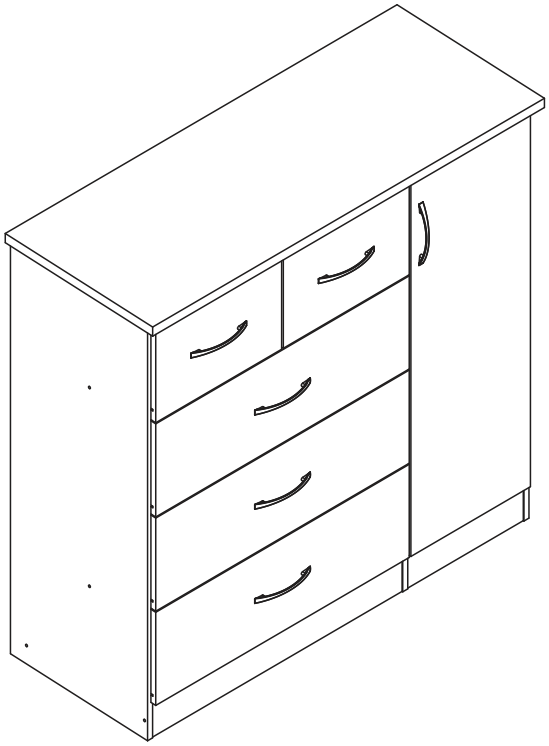

IMPORTANT

FOR DOMESTIC USE ONLY

PLEASE READ BEFORE YOU CONTINUE FURTHER

CARE AND MAINTENANCE

After unpacking this product please keep the original packaging in case it needs to be returned for any reason.

- Please ensure all fittings and parts are present before commencing with assembly.
- Never drag or push products as this could cause damage to the joints making it inferior.
- We strongly recommend that you keep children away from your work area.
- We recommend that you lay a blanket or sheet on the floor to avoid damage to both your floor and the product.
- Assemble this product as close to its final position as possible.
- Do not place this product next to a radiator or in direct sunlight.
- Do not drag or push items across your high gloss furniture as this may cause the surface to scratch
- Wood is a natural product and may expand if subjected to damp and may shrink or crack if subjected to heat. Therefore it is recommended that room temperature is maintained, with no sudden temperature fluctuations.
- Make sure any spillage is wiped off immediately.
- Do not place hot or chilled items directly on to the surface, use a place mat or marking will occur.
- For general cleaning use a soft cotton or micro fibre cloth, and do not use detergents of any kind.
- From time to time it may be necessary to tighten fittings, regular inspections should be carried out.
- Do not place on a wet or damp floor as staining may occur to your floor.

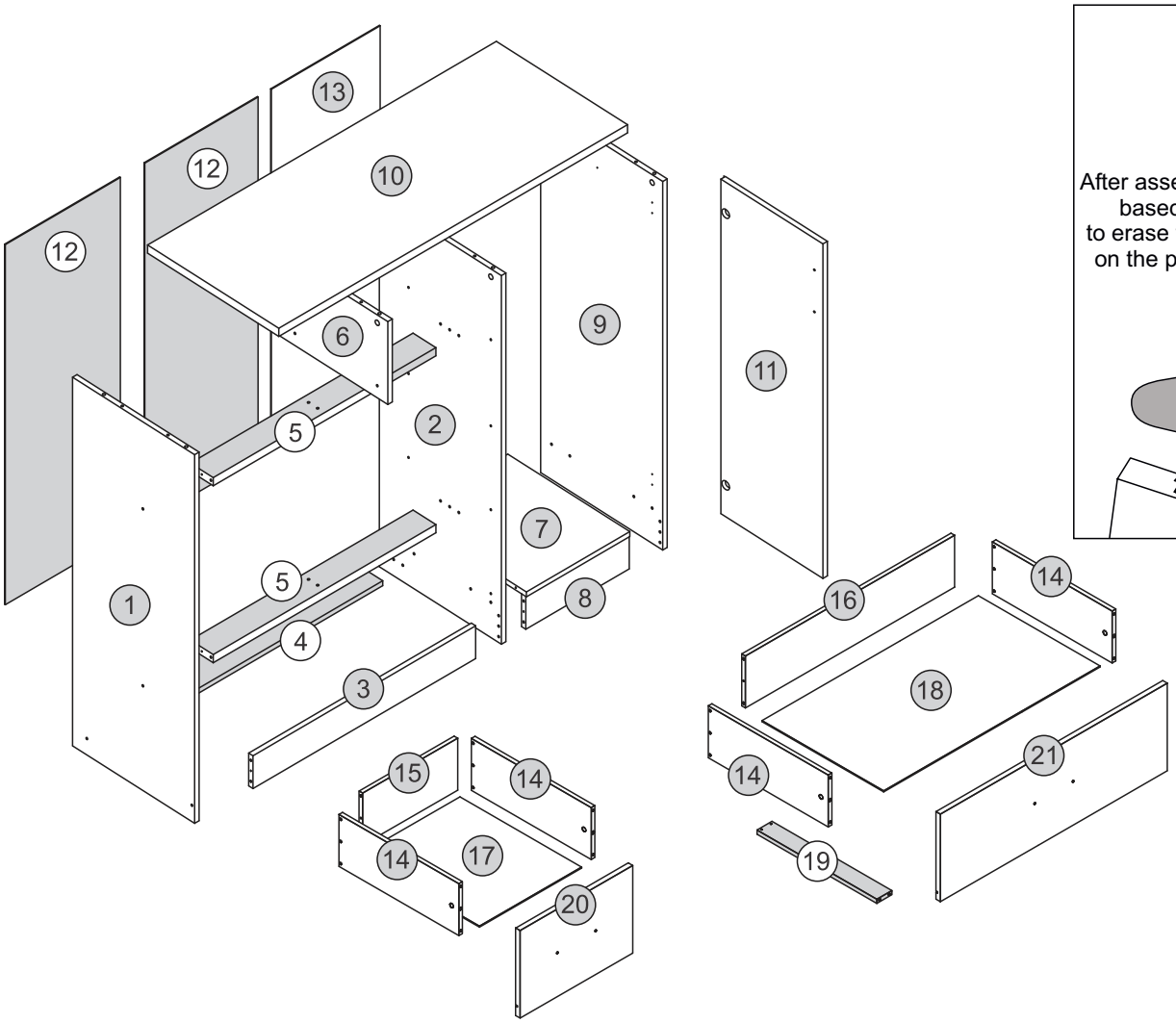

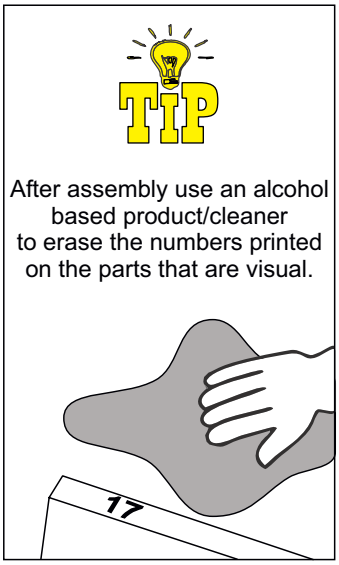

Please Note:
The below parts have all been stamped with the part number to help identify them during assembly.

Part Number	Part Description	Quantity	Carton
01	Left Side Panel	1	1/2
02	Large Division Panel	1	1/2
03	Front Baseboard	1	1/2
04	Back Baseboard	1	1/2
05	Crossbar	2	2/2
06	Drawer Division Panel	1	1/2
07	Base	1	2/2
08	Small Front Baseboard	1	1/2
09	Right Side Panel	1	1/2
10	Top Panel	1	2/2
11	Door	1	2/2
12	Large Back Panel	2	2/2
13	Small Back Panel	1	2/2
14	Drawer Side	10	1/2
15	Small Drawer Back Panel	2	1/2
16	Large Drawer Back Panel	3	1/2
17	Small Drawer Bottom	2	1/2
18	Large Drawer Bottom	3	2/2
19	Drawer Botom Support Bar	3	1/2
20	Small Drawer Front	2	2/2
21	Large Drawer Front	3	2/2

TOOLS REQUIRED

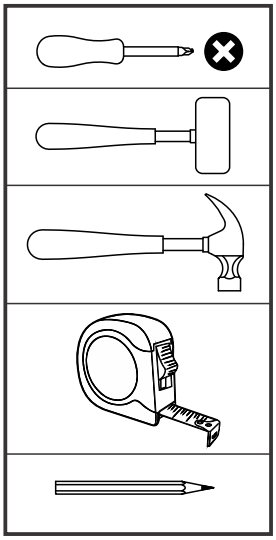

FITTINGS LIST

A Flat Head Screw Ø6,0 x 10mm (16x) +/2	**B** Double Flat Head Screw Ø4,0 x 12mm (2x) +/1	**C** Flat Head Screw Ø4,0 x 14mm (44x) +/2	**D** Flan Head Screw Ø4,0 x 20mm (12x) +/2
E Flat Head Screw Ø3,5 x 40mm (6x) +/1	**F** Flat Head Screw Ø4,0 x 50mm (24x) +/2	**G** Dowel Ø6,0 x 30mm (75x) +/2	
H Nail 10 x 10 (104x) +/2	**I** Back Panel Bracket (8x) +/1	**J** Cam Nut Ø12mm (10x) +/2	**K** Washer (4x) +/1
L Plastic Foot (9x) +/1	**M** Flan Head Screw Ø3,5 x 30mm (2x) +/1	**N** Cam Bolt (18x) +/2	**O** Hole Plugs (10x) +/2
P Glue (2x)	**Q** Drawer Runners (5x)		
R Back Panel Strip (1x)	**S** Strap (2x)	**T** Handle (6x)	
U Cam Nut Ø15mm (8x) +/1	**V** 'L' Metallic Support (1x) +/1	**W** Dowel Ø6,0 x 50mm (2x) +/1	**X** Hinge (2x)
Y Hinge Plate (2x)	**Z** Hanging Rail Support (2x)	**A1** Hanging Rail (1x)	**B1** Hole Plugs (18x) +/2

TIPS FOR FITTINGS CAM-LOCKS

WHEN FITTING CAM NUT. ENSURE STARTING POSITION IS CORRECT BEFORE YOU INSERT CONNECTING CAM BOLT TURN CLOCKWISE UNTIL SECURE

CORRECT WRONG

Cam bolt head needs to be in centre

CAMBOLT

Tighten until shoulder in flush with panel. Do not overtighten or undertighten (see example beside)

Shoulder

Panel **Panel**

STEP 1

PARTS REQUIRED

4 - BACK BASEBOARD	x1
5 - CROSSBAR	x2
7 - BASE	x1

HARDWARE REQUIRED

G	Ø6,0 x 30mm	16
P	Glue	01

TOOLS REQUIRED

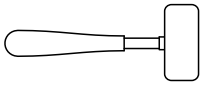

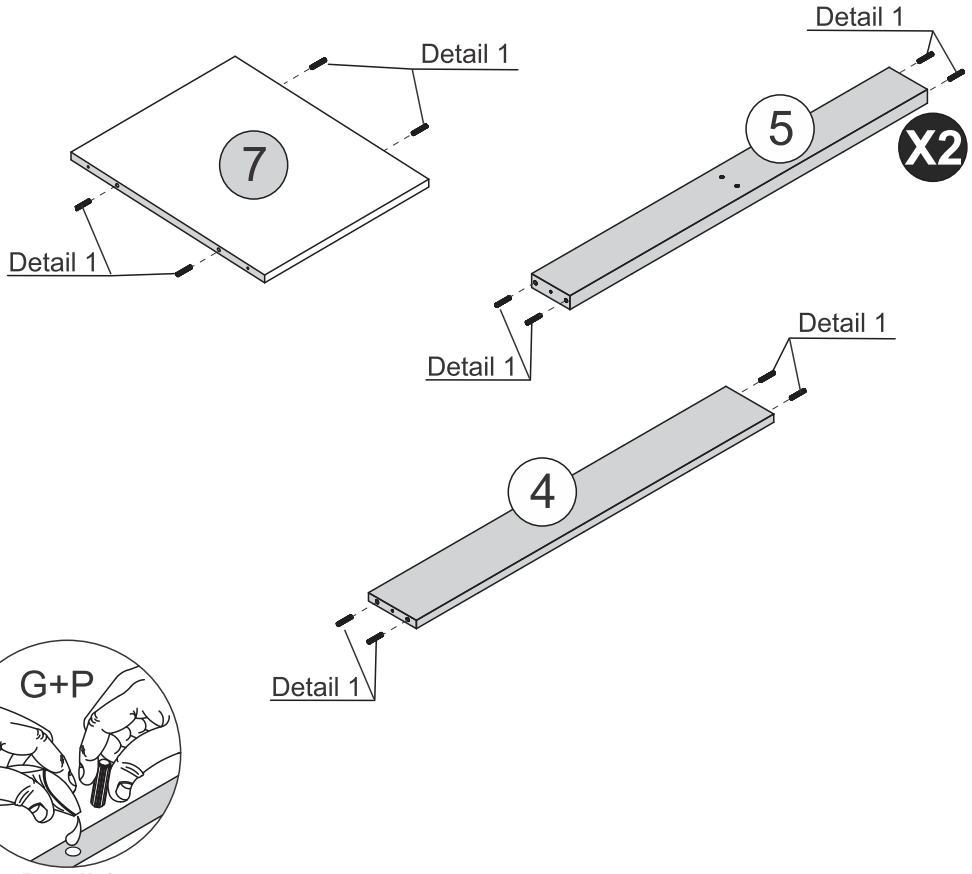

STEP 2

PARTS REQUIRED

3 - FRONT BASEBOARD	x1
8 - SMALL FRONT BASEBOARD	x1

HARDWARE REQUIRED

G	Ø6,0 x 30mm	04
H		03
L		03
W	Ø6,0 x 50mm	02
P	Glue	01

TOOLS REQUIRED

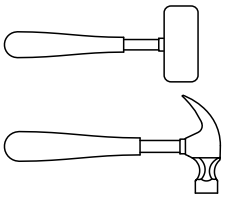

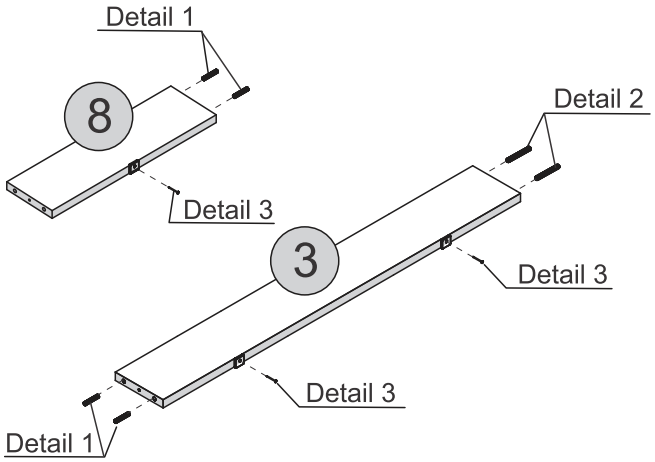

STEP 3

PARTS REQUIRED

2 - LARGE DIVISION PANEL	x1

HARDWARE REQUIRED

A	Ø6,0 x 10mm	08
G	Ø6,0 x 30mm	02
P	Glue	01
Q	Right	04

TOOLS REQUIRED

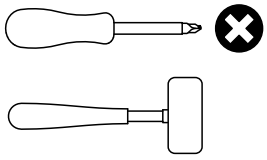

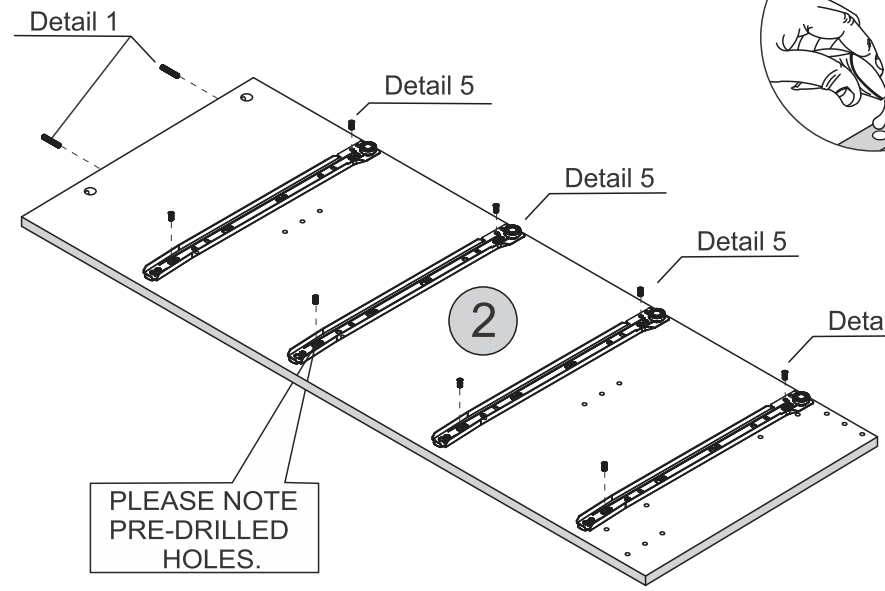

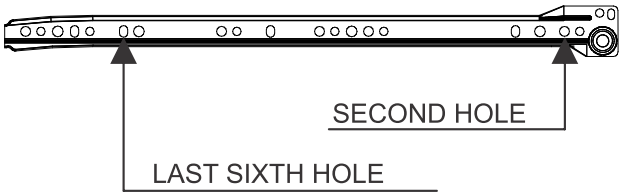

Detail 1

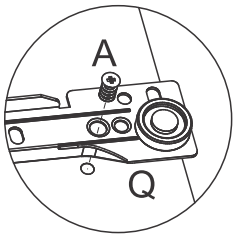

Detail 5

STEP 4

PARTS REQUIRED

2 - LARGE DIVISION PANEL	x1

HARDWARE REQUIRED

C	Ø4,0 x 14mm	02
H		02
L		02
Z		01

TOOLS REQUIRED

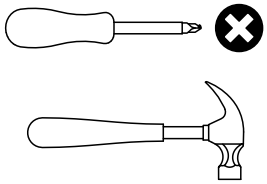

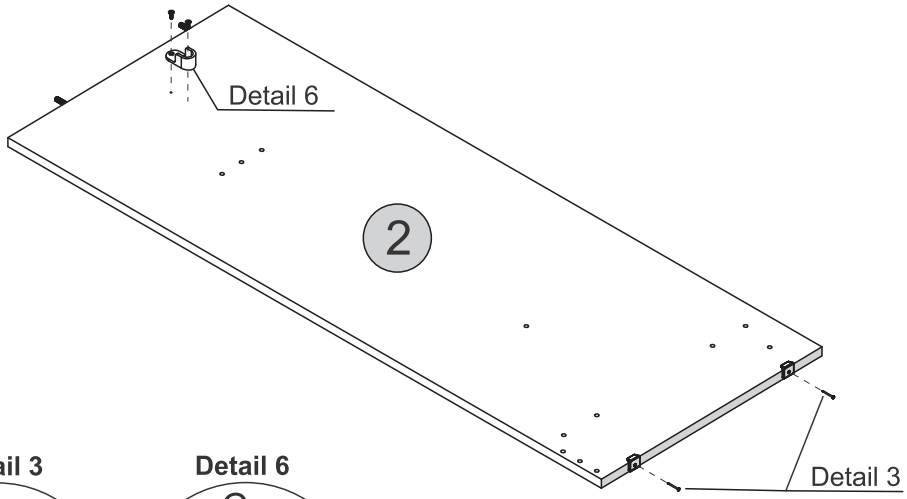

Detail 3

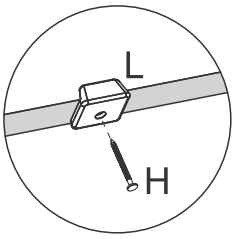

Detail 6

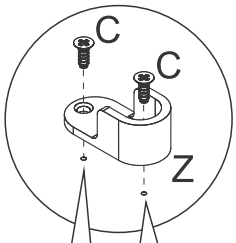

Please note: Pre-marked Holes

STEP 5

PARTS REQUIRED

1 - LEFT SIDE PANEL	x1

HARDWARE REQUIRED

A	Ø6,0 x 10mm	08
Q	Left	04

TOOLS REQUIRED

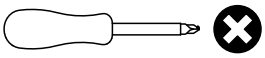

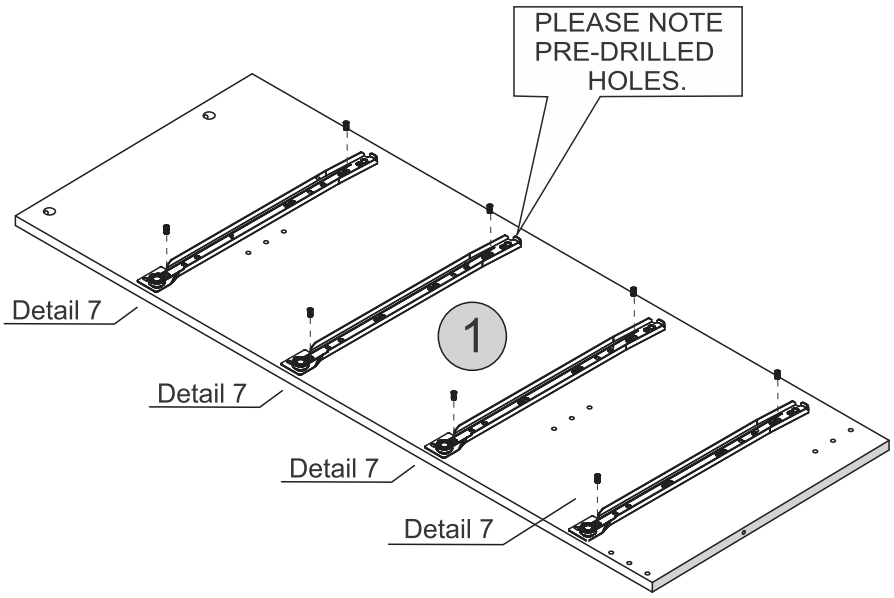

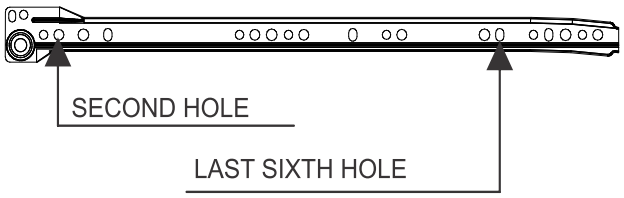

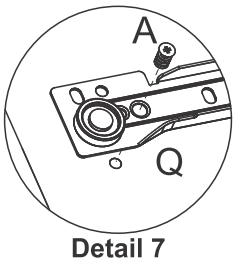

Detail 7

STEP 6

PARTS REQUIRED

1 - LEFT SIDE PANEL	x1

HARDWARE REQUIRED

G	Ø6,0 x 30mm	02
H		02
L		02
P	Glue	01

TOOLS REQUIRED

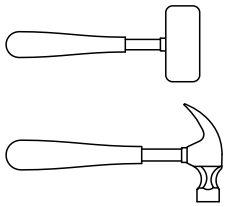

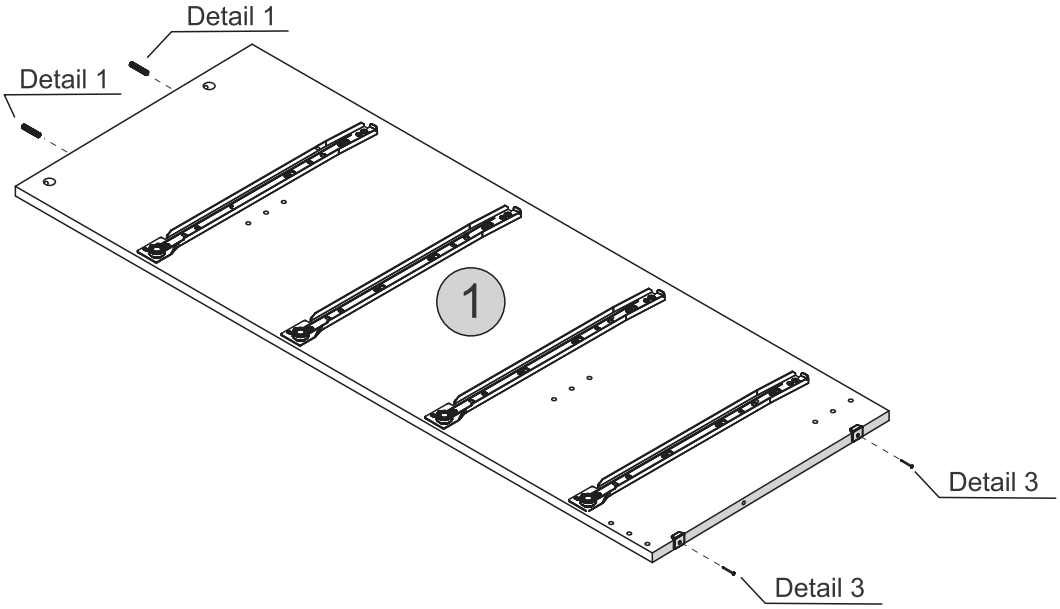

Detail 1

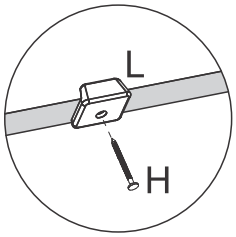

Detail 3

STEP 7

PARTS REQUIRED

6 - DRAWER DIVISION PANEL x1

HARDWARE REQUIRED

B		02
G	Ø6,0 x 30mm	03
P	Glue	01
Q	Right	01
Q	Left	01

TOOLS REQUIRED

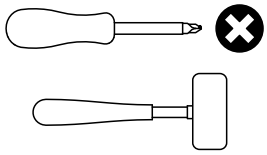

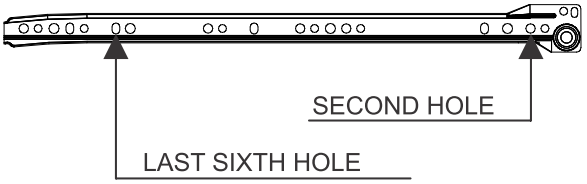

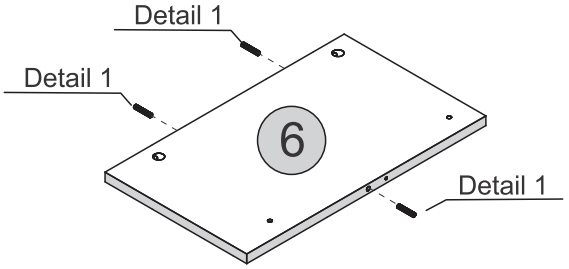

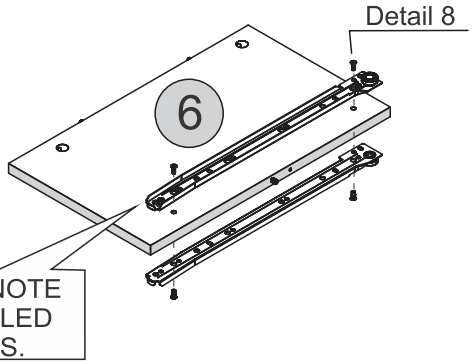

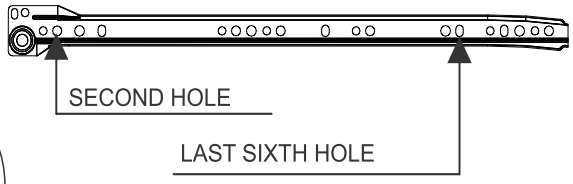

Detail 1

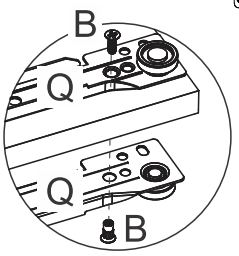

Detail 8

STEP 8

PARTS REQUIRED

9 - RIGHT SIDE PANEL x1

HARDWARE REQUIRED

C	Ø4,0 x 14mm	06
G	Ø6,0 x 30mm	02
P	Glue	01
Y		02
Z		01

TOOLS REQUIRED

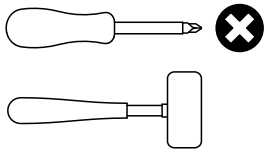

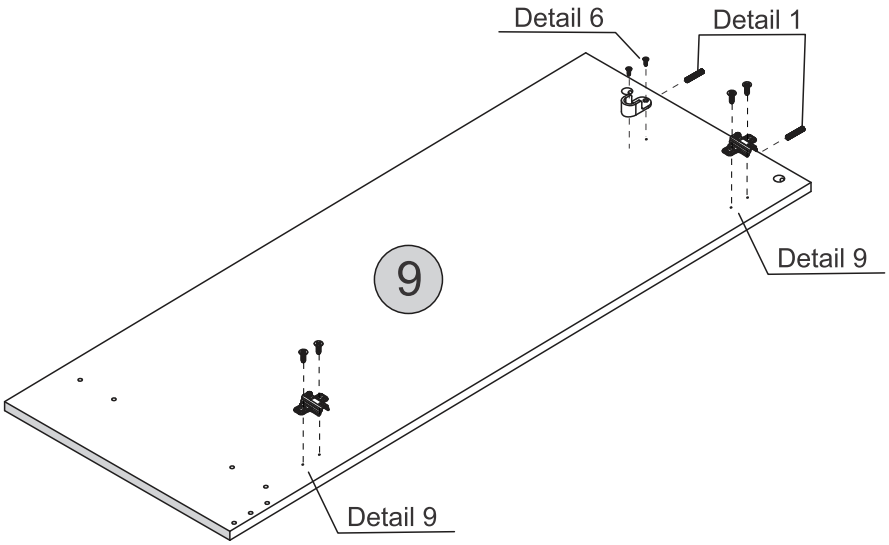

Detail 1

Detail 6

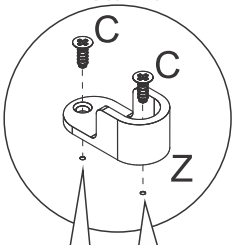

Please note: Pre-marked Holes

Detail 9

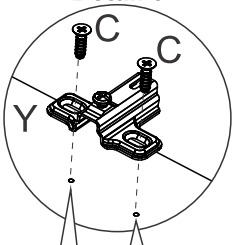

Please note: Pre-marked Holes

STEP 9

PARTS REQUIRED

9 - RIGHT SIDE PANEL	x1

HARDWARE REQUIRED

H		02
L		02

TOOLS REQUIRED

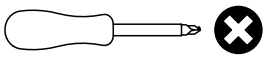

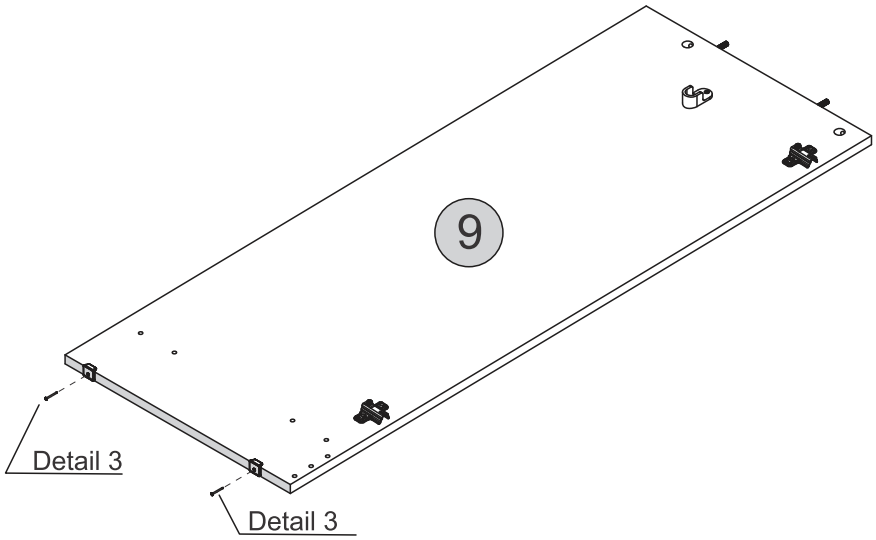

Detail 3

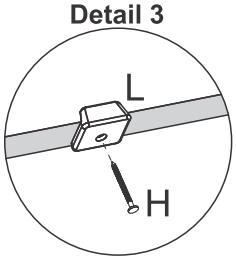

STEP 10

PARTS REQUIRED

10 - TOP PANEL	x1

HARDWARE REQUIRED

N	Cam Bolt	08

TOOLS REQUIRED

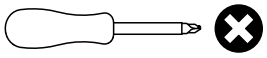

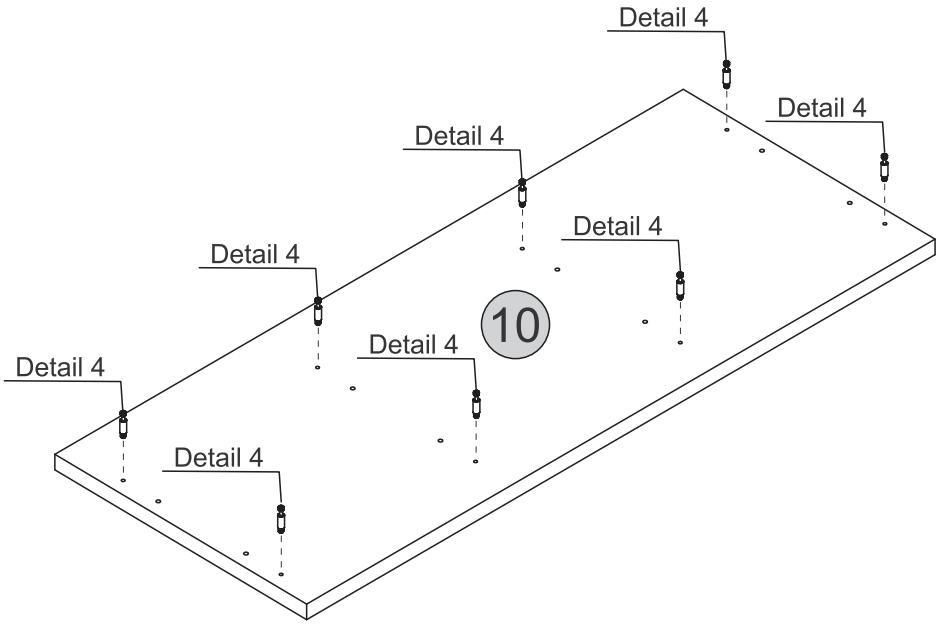

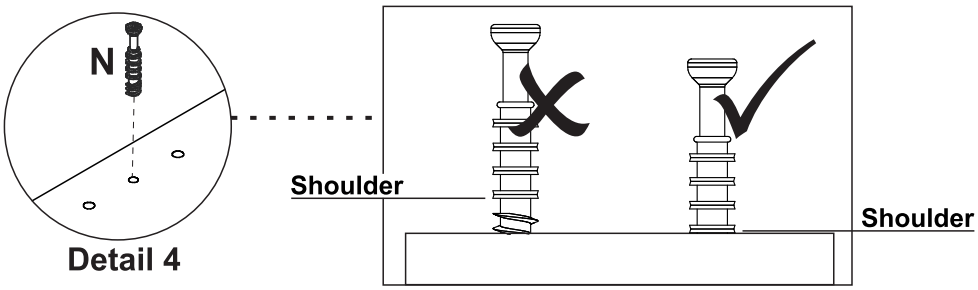

Detail 4

STEP 11

PARTS REQUIRED

1 - LEFT SIDE PANEL	x1
2 - LARGE DIVISION PANEL	x1
3 - FRONT BASEBOARD	x1
4 - BACK BASEBOARD	x1
5 - CROSSBAR	x2

HARDWARE REQUIRED

F	Ø4,0 x 50mm	08
P	Glue	01

TOOLS REQUIRED

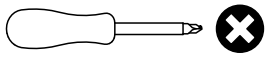

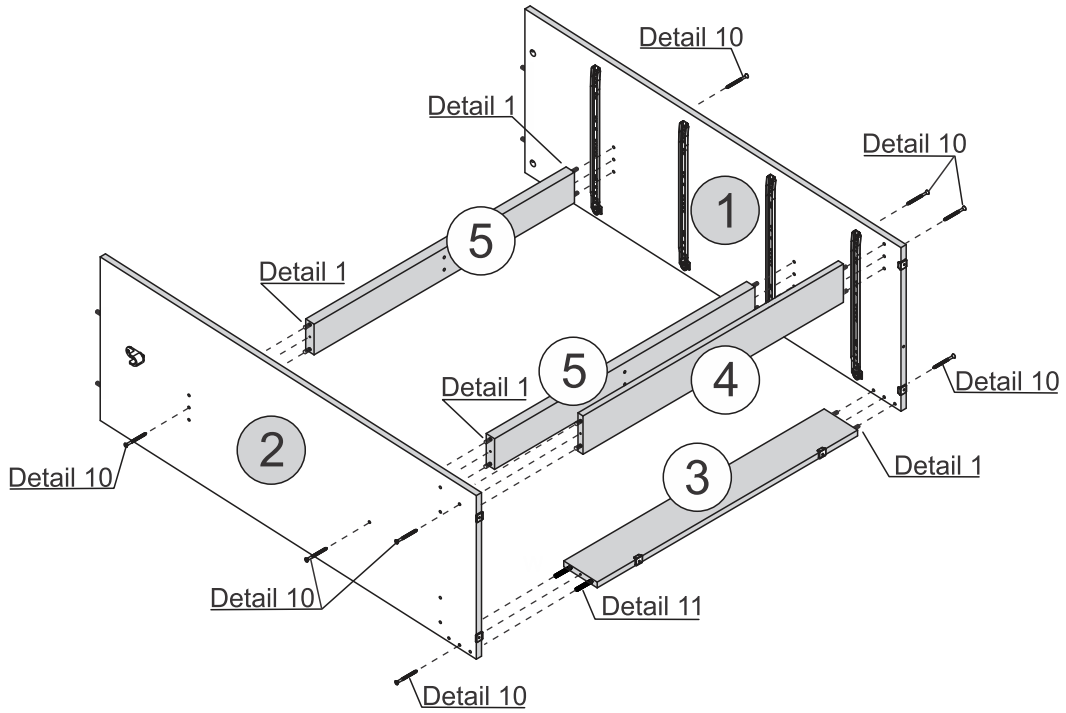

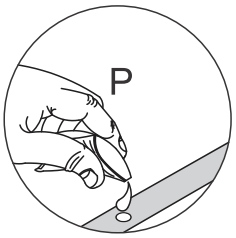

Detail 1

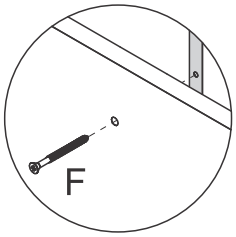

Detail 10

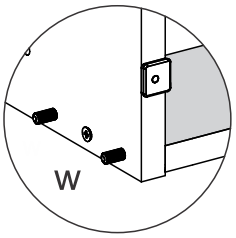

Detail 11

STEP 12

PARTS REQUIRED

7 - BASE	x1
8 - SMALL FRONT BASEBOARD	x1
9 - RIGHT SIDE PANEL	x1

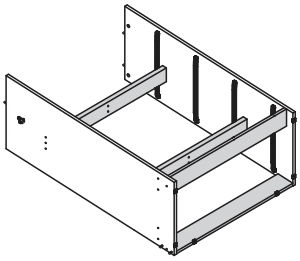

HARDWARE REQUIRED

F	Ø4,0 x 50mm	05
P	Glue	01

TOOLS REQUIRED

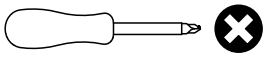

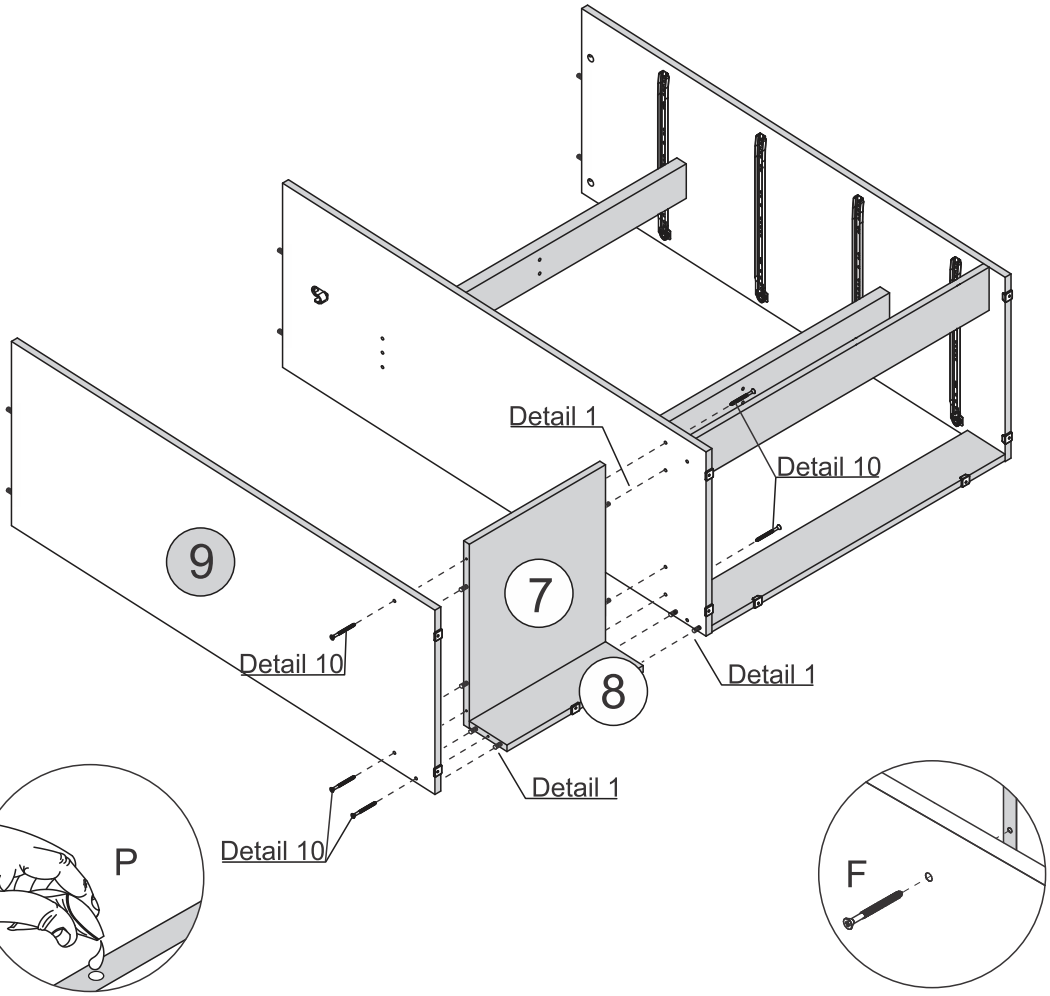

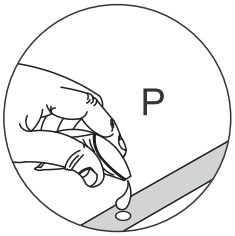

Detail 1

Detail 10

STEP 13

PARTS REQUIRED

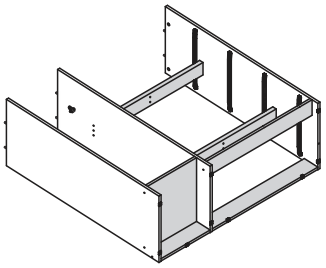

HARDWARE REQUIRED

C	Ø4,0 x 14mm	02
V		01

TOOLS REQUIRED

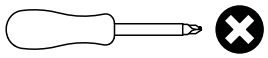

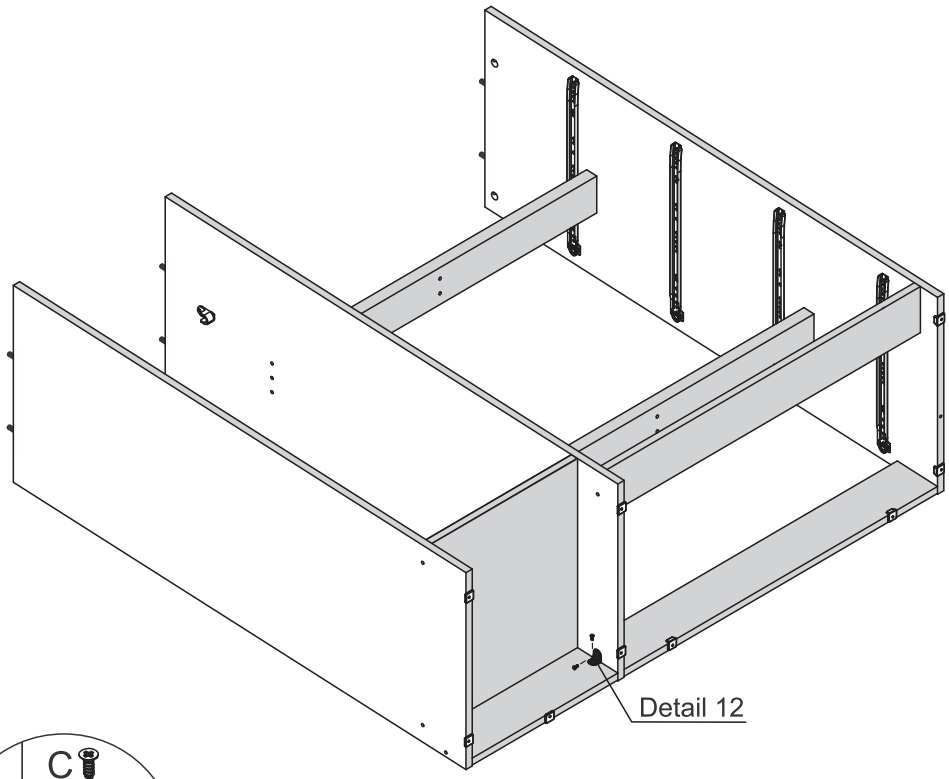

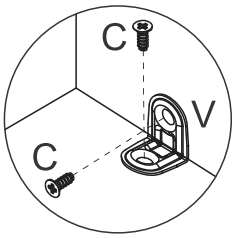

Detail 12

STEP 14

PARTS REQUIRED

6 - DRAWER DIVISION PANEL	x1
10 - TOP PANEL	x1

HARDWARE REQUIRED

U		02
P	Glue	01

TOOLS REQUIRED

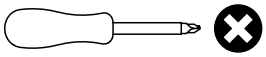

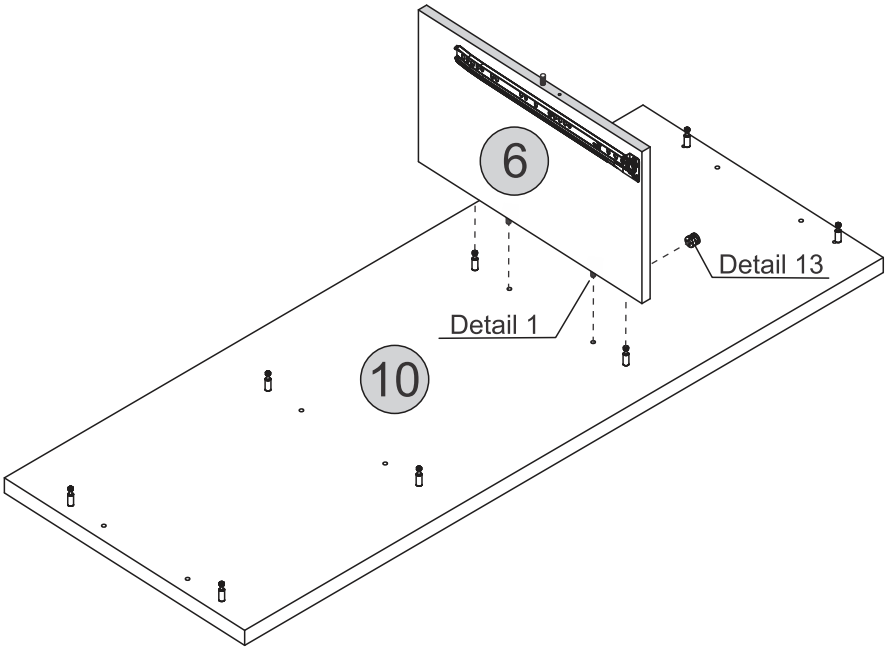

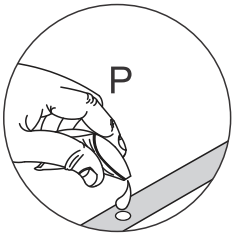

Detail 1

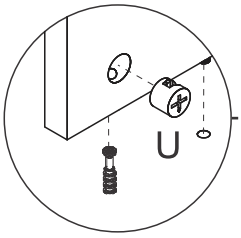

Detail 13

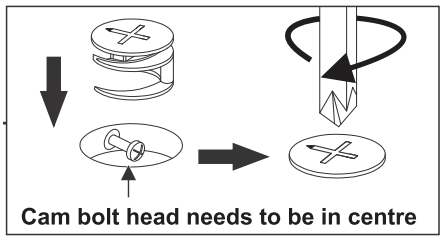

STEP 15

PARTS REQUIRED

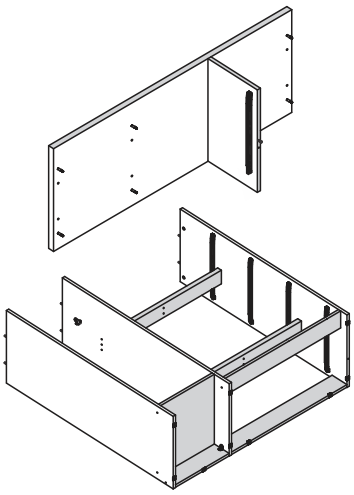

HARDWARE REQUIRED

F	Ø4,0 x 50mm	01
U		06
P	Glue	01

TOOLS REQUIRED

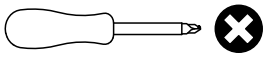

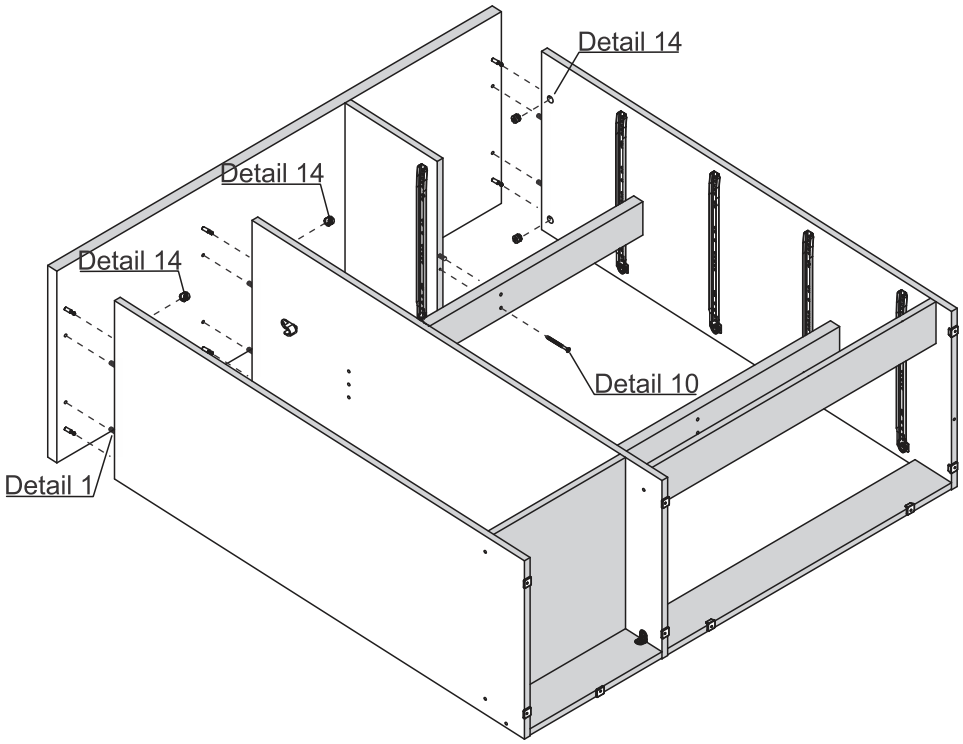

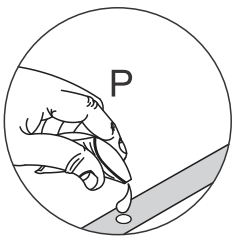

Detail 1

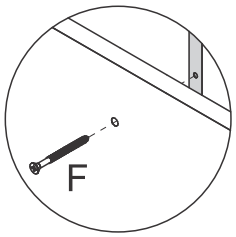

Detail 10

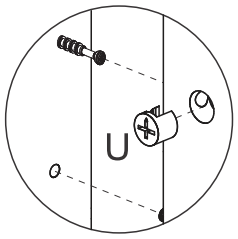

Detail 14

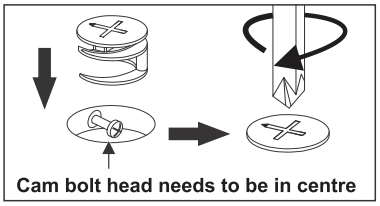

STEP 16

PARTS REQUIRED

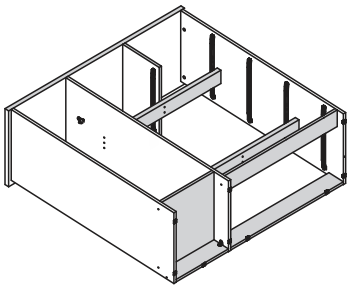

12 - LARGE BACK PANEL	x2
13 - SMALL BACK PANEL	x1

HARDWARE REQUIRED

H	10 x 10	47
I		08
R		01

TOOLS REQUIRED

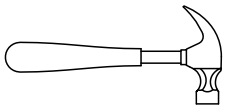

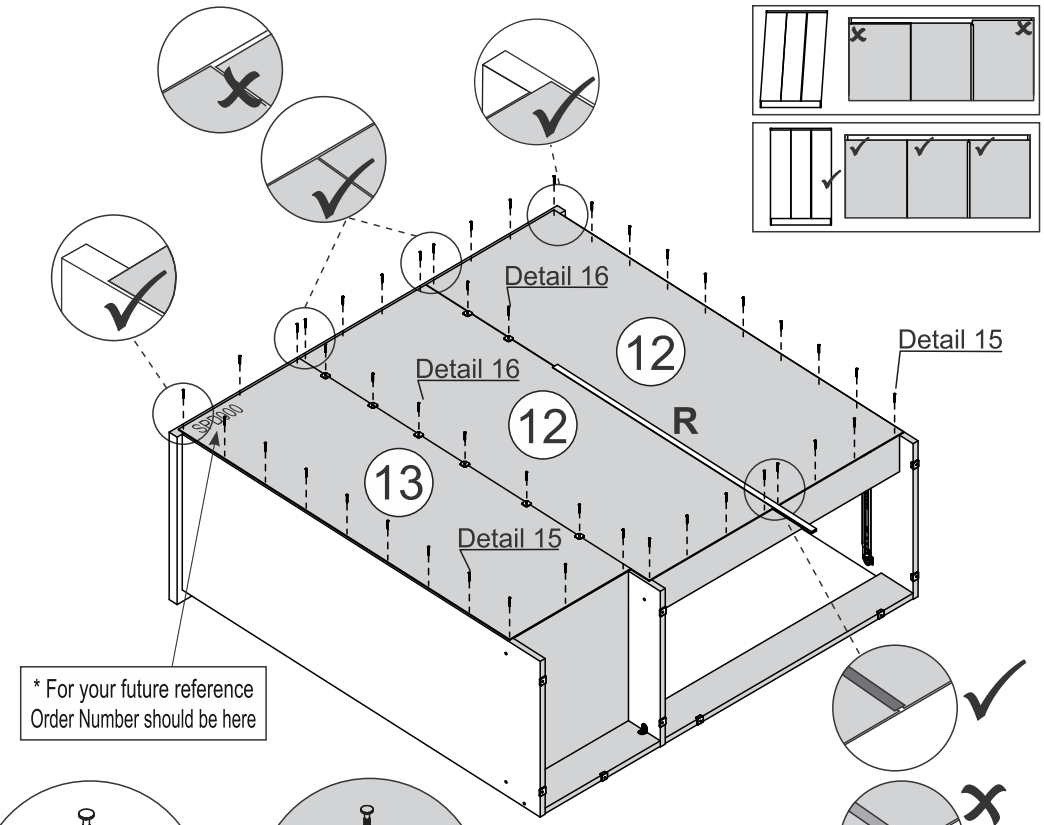

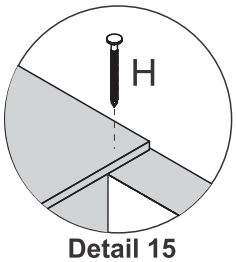

Detail 15

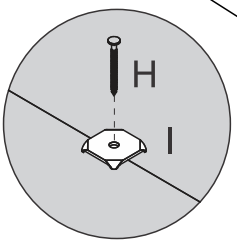

Detail 16

STEP 17

PARTS REQUIRED

20 - SMALL DRAWER FRONT	x2
21 - LARGE DRAWER FRONT	x3

HARDWARE REQUIRED

N		10

TOOLS REQUIRED

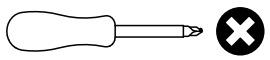

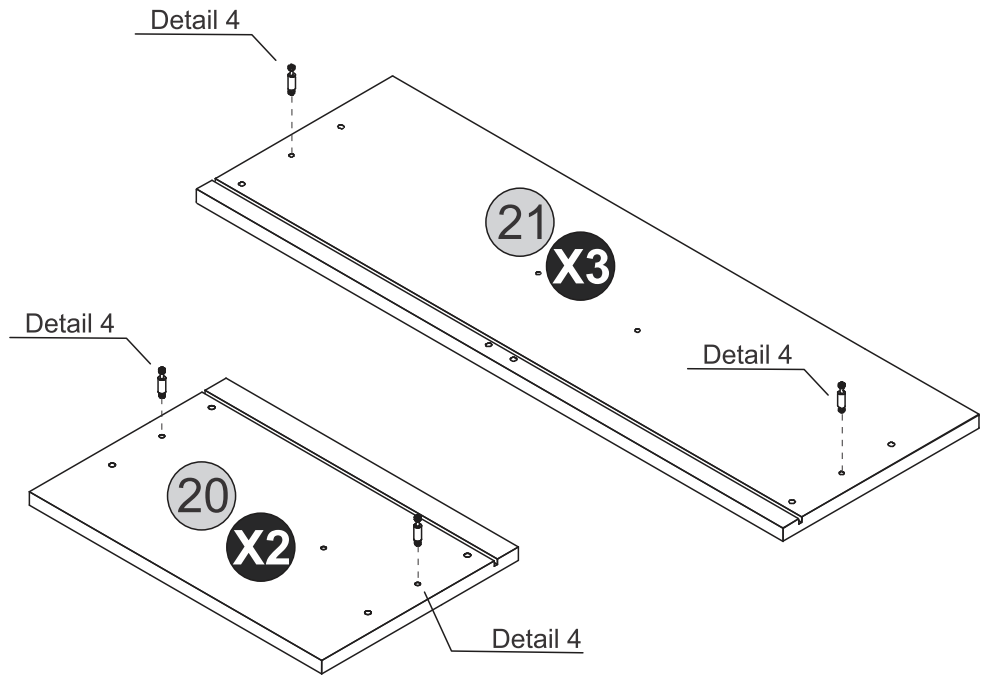

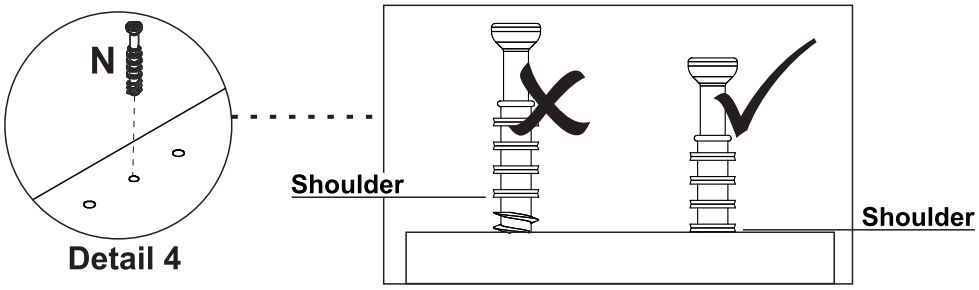

STEP 18

PARTS REQUIRED

14 - DRAWER SIDE	x10
15 - SMALL DRAWER BACK PANEL	x2
16 - LARGE DRAWER BACK PANEL	x3
19 -DRAWER BOTTOM SUPPORT BAR	x3

HARDWARE REQUIRED

G	Ø6,0 x 30mm	46
P	Glue	01

TOOLS REQUIRED

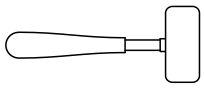

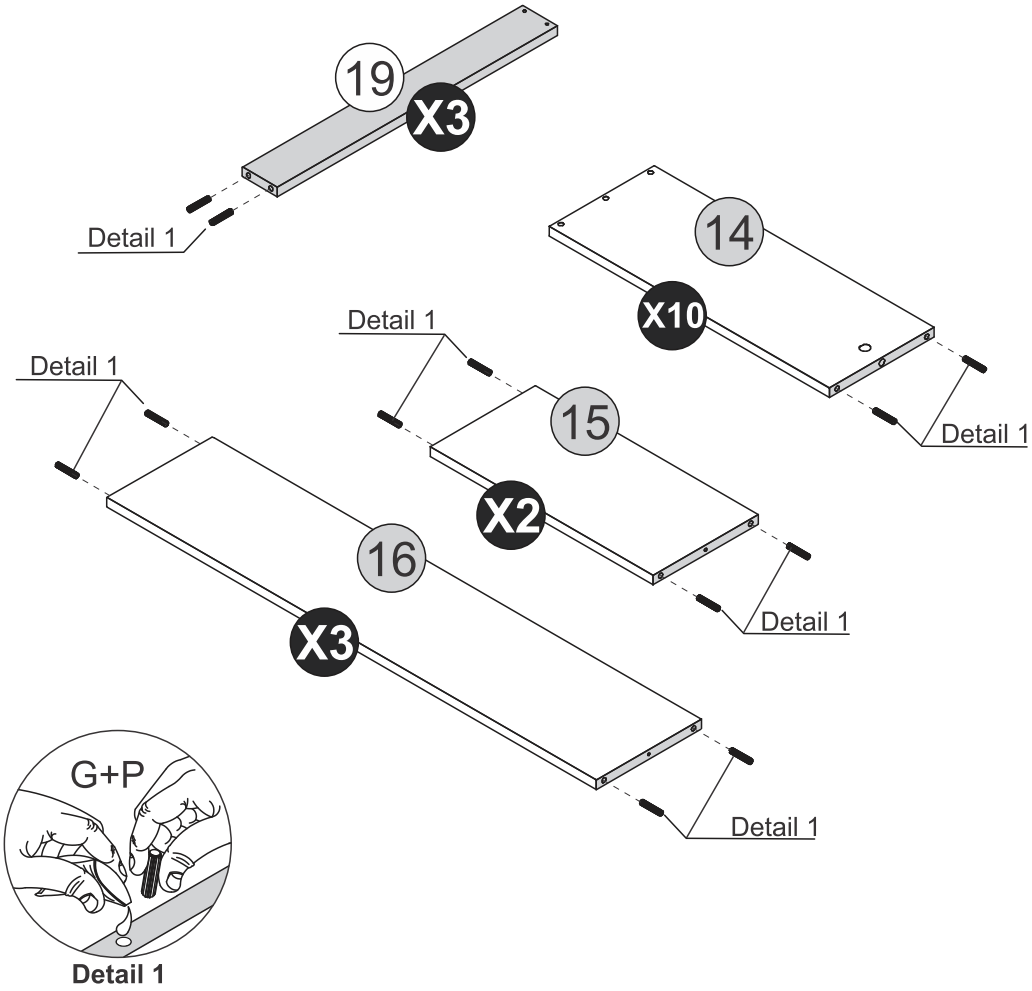

STEP 19

PARTS REQUIRED

14 - DRAWER SIDE	x6
16 - LARGE DRAWER BACK PANEL	x3

HARDWARE REQUIRED

F	Ø4,0 x 50mm	06
P	Glue	01

TOOLS REQUIRED

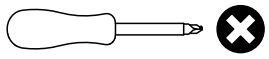

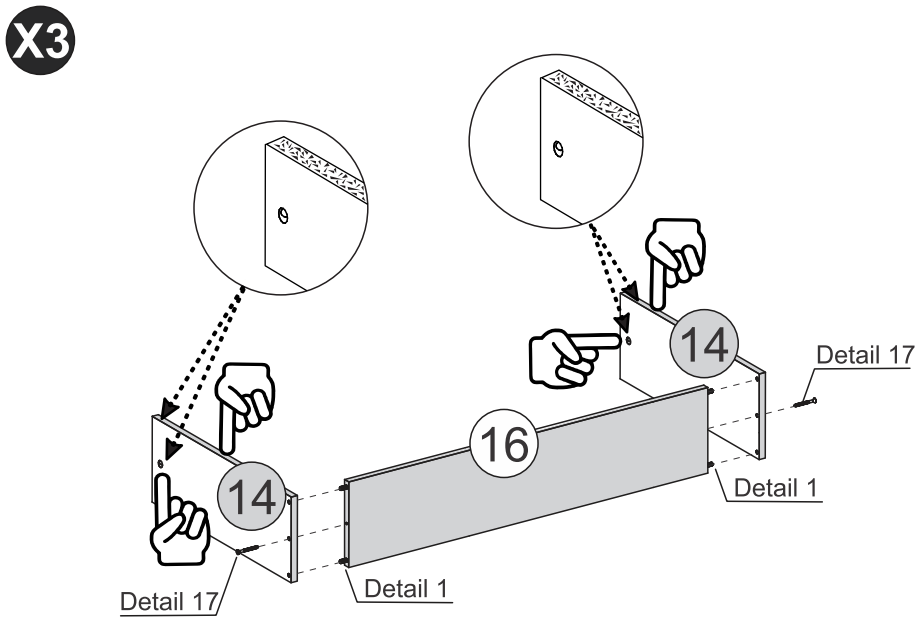

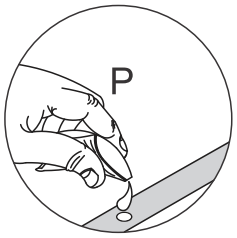

Detail 1

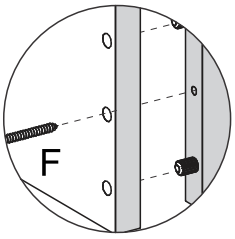

Detail 17

STEP 20

PARTS REQUIRED

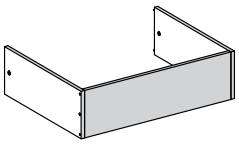

21 - LARGE DRAWER FRONT	x3

HARDWARE REQUIRED

J		06
B1		06
P	Glue	01

TOOLS REQUIRED

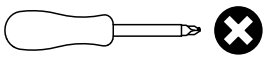

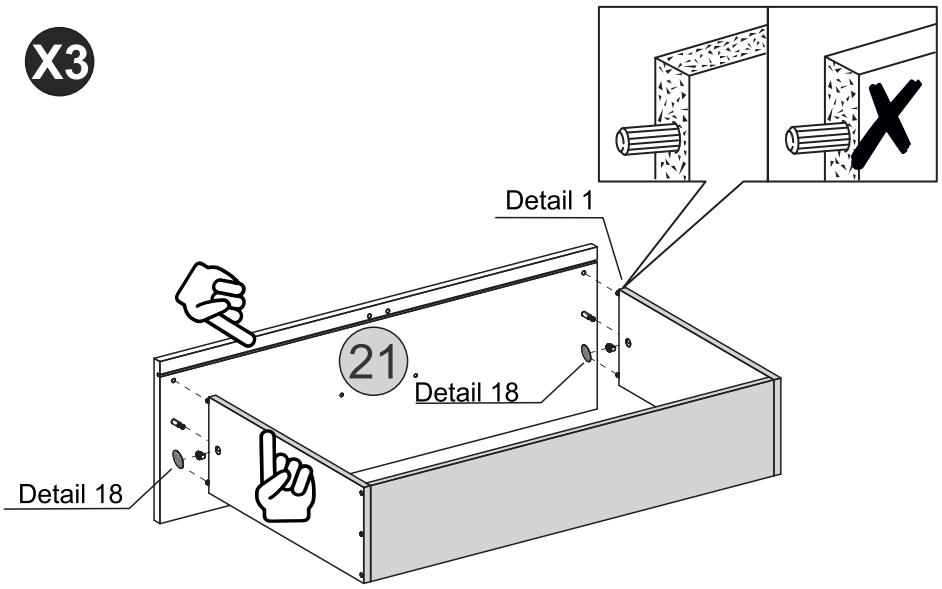

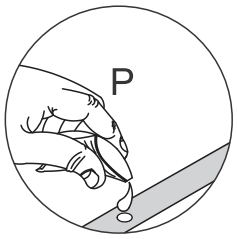

Detail 1

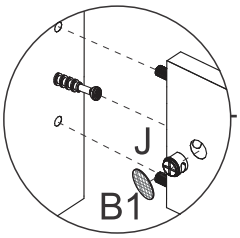

Detail 18

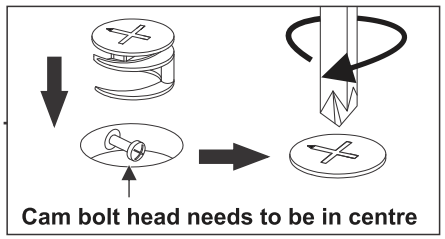

STEP 21

PARTS REQUIRED

18 - LARGE DRAWER BOTTOM x3

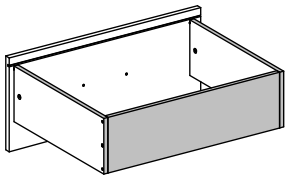

HARDWARE REQUIRED

H	10 x 10	12

TOOLS REQUIRED

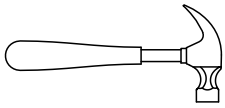

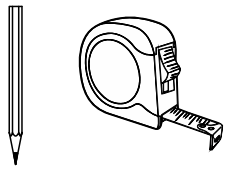

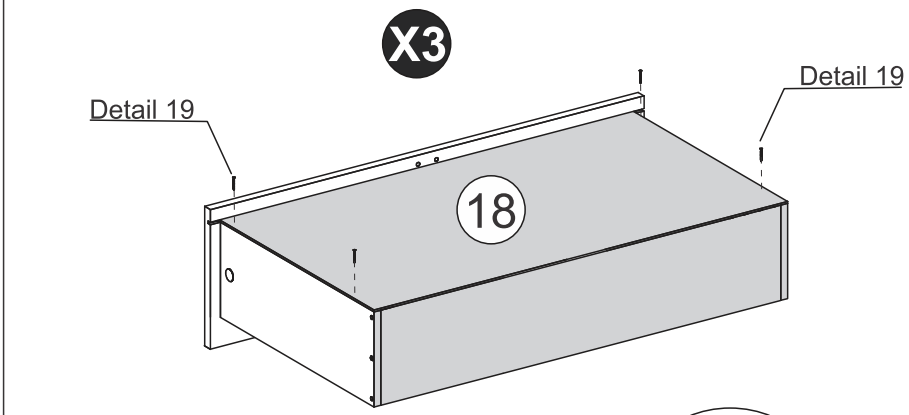

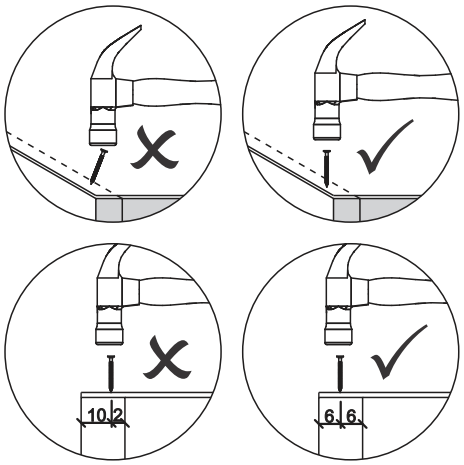

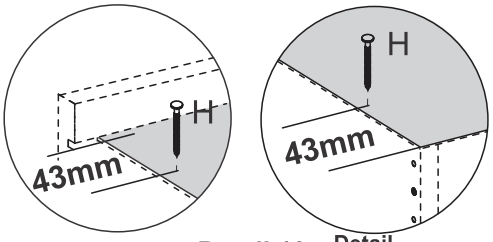

Detail 19 Detail

STEP 22

PARTS REQUIRED

19 - DRAWER BOTTOM SUPPORT BAR x3

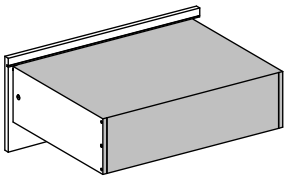

HARDWARE REQUIRED

H	10 x 10	18
P	Glue	01

TOOLS REQUIRED

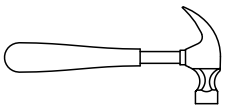

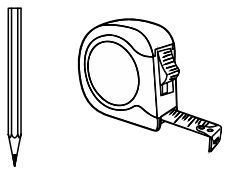

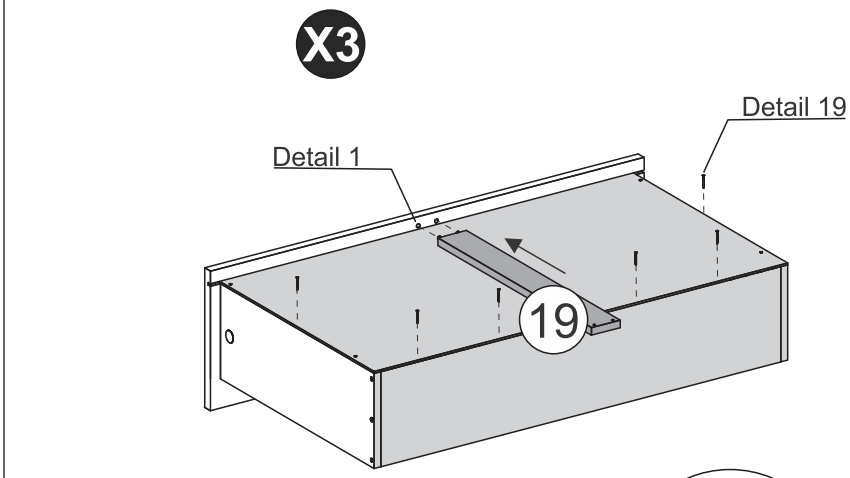

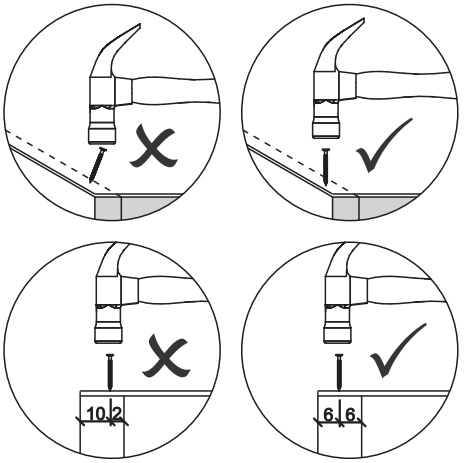

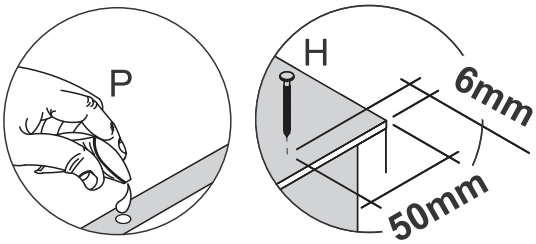

Detail 1 Detail 19

STEP 23

PARTS REQUIRED

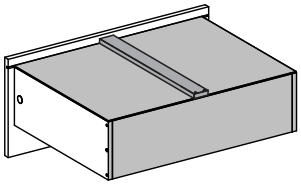

HARDWARE REQUIRED

C	Ø4,0 x 14mm	12
E	Ø3,5 x 40mm	06
Q	LEFT	03
Q	RIGHT	03

TOOLS REQUIRED

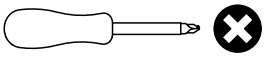

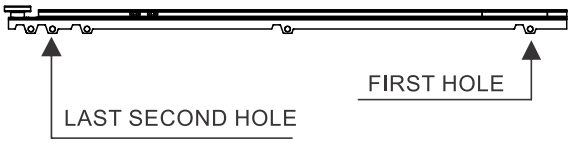

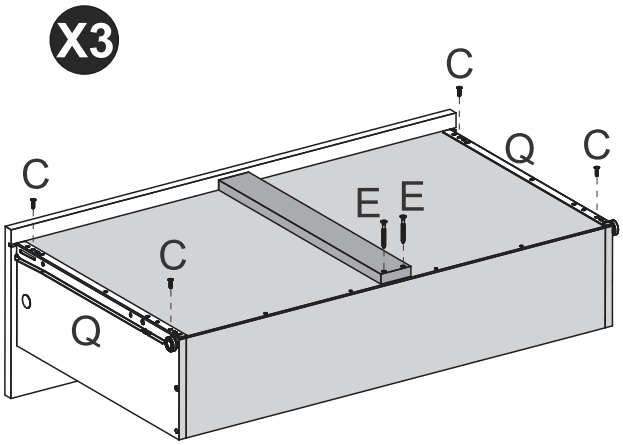

STEP 24

PARTS REQUIRED

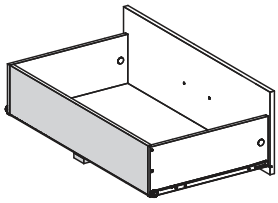

HARDWARE REQUIRED

D	Ø4,0 x 20mm	06
T		03

TOOLS REQUIRED

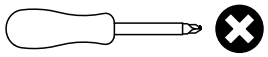

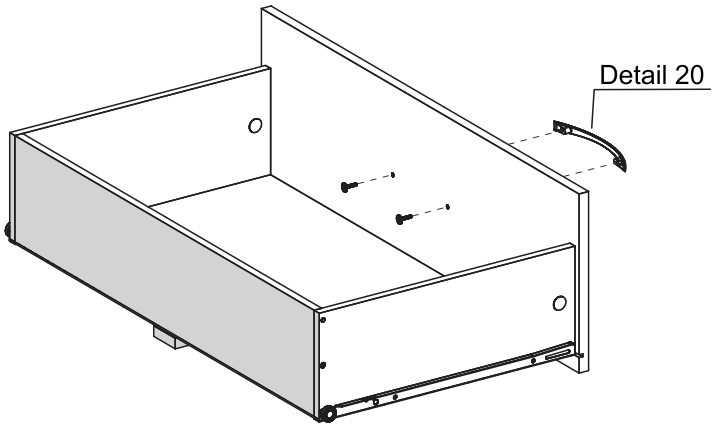

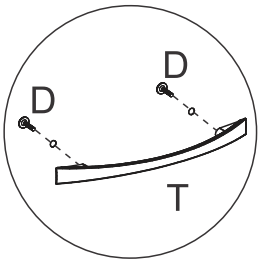

Detail 20

STEP 25

PARTS REQUIRED

14 - DRAWER SIDE	x4
15 - SMALL DRAWER BACK PANEL	x2

HARDWARE REQUIRED

F	Ø4,0 x 50mm	04

TOOLS REQUIRED

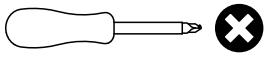

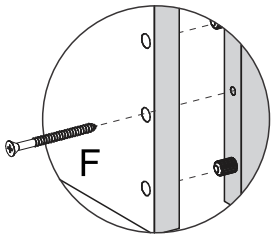

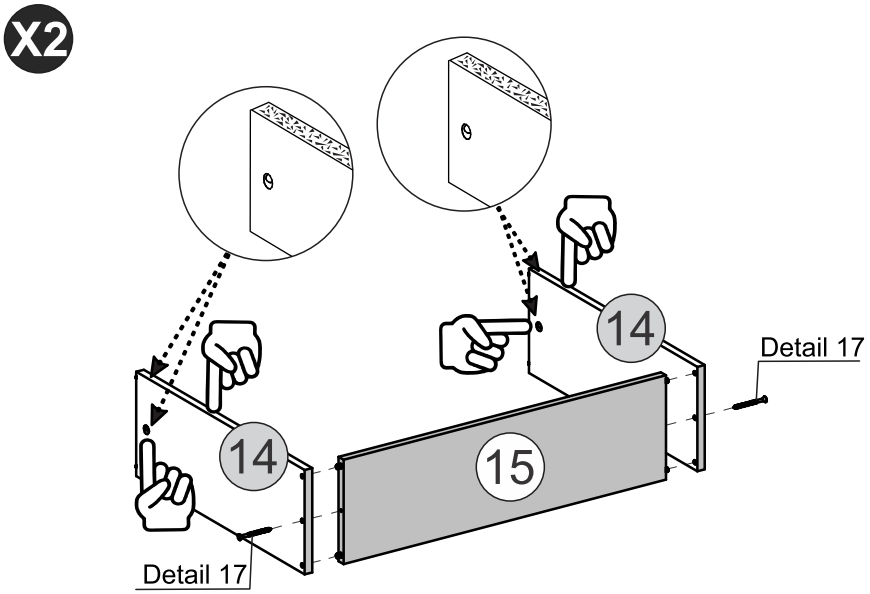

STEP 26

PARTS REQUIRED

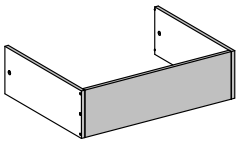

20 - SMALL DRAWER FRONT	x2

HARDWARE REQUIRED

J		04
B1		04
P	Glue	01

TOOLS REQUIRED

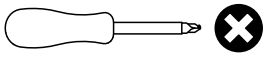

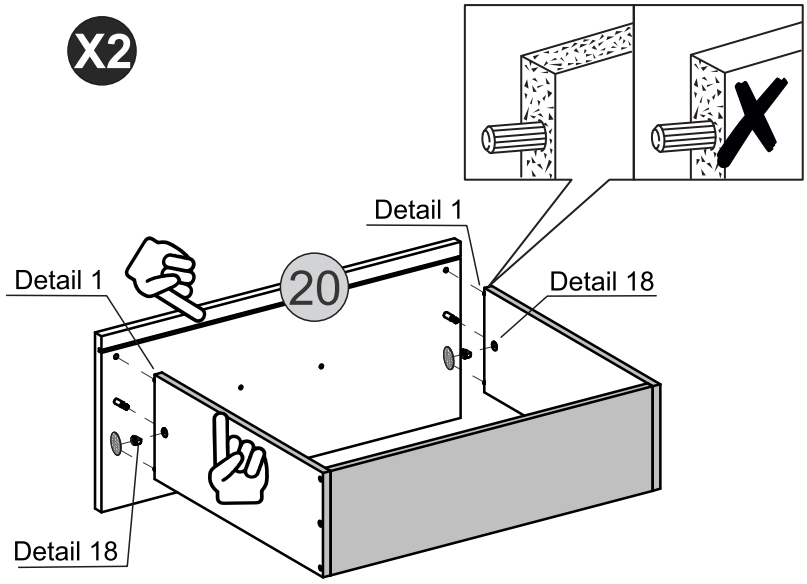

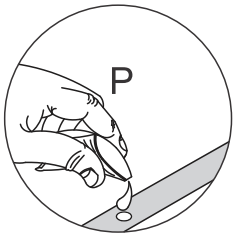

Detail 1

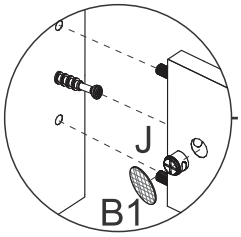

Detail 18

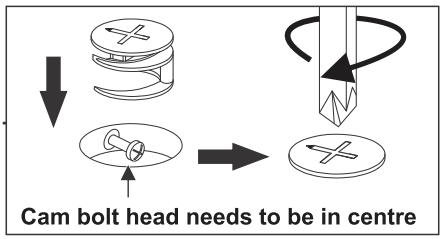

STEP 27

PARTS REQUIRED

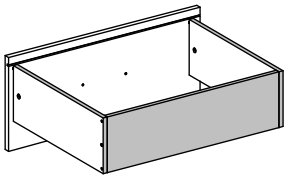

17 - SMALL DRAWER BOTTOM x2

HARDWARE REQUIRED

H	10 x 10	08

TOOLS REQUIRED

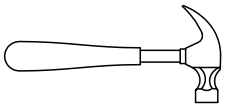

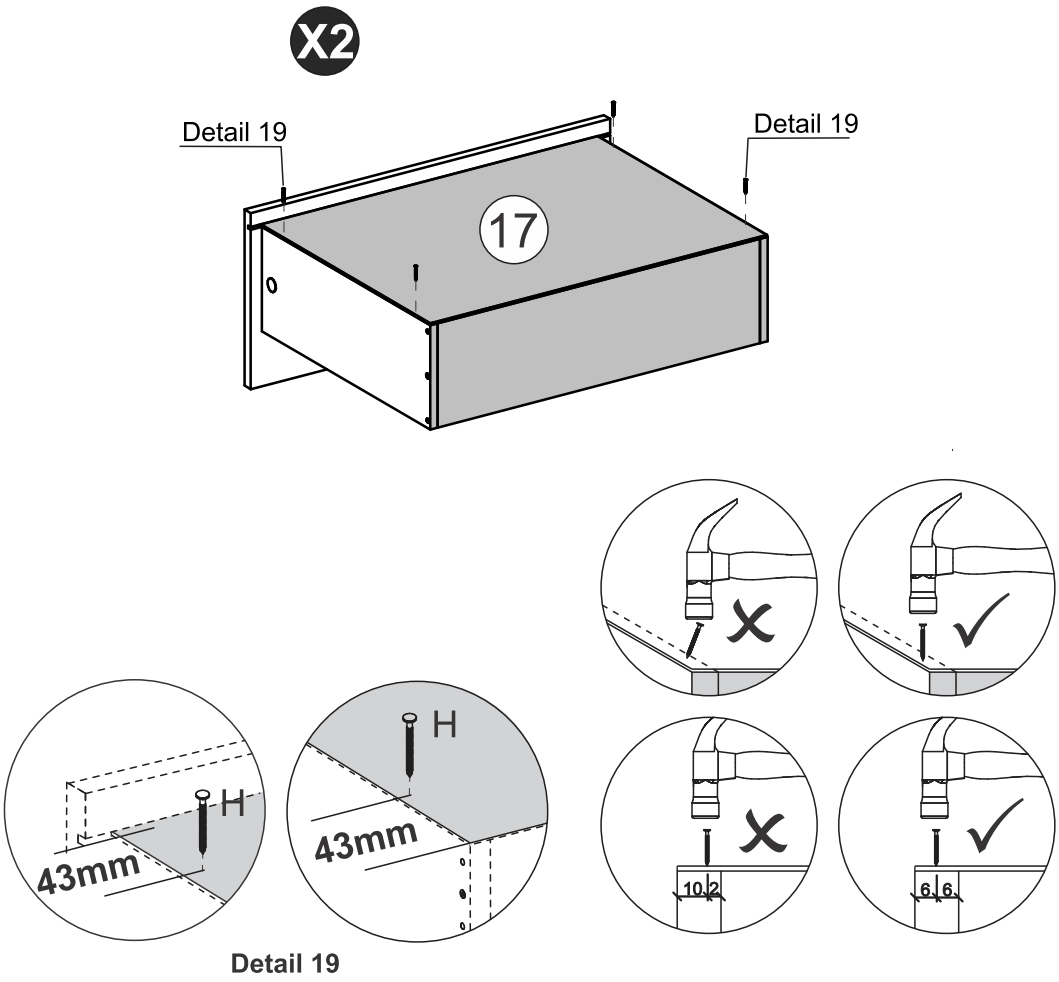

STEP 28

PARTS REQUIRED

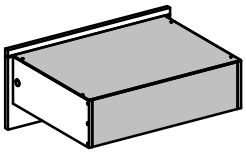

HARDWARE REQUIRED

H	10 x 10	10

TOOLS REQUIRED

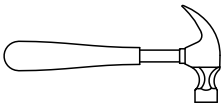

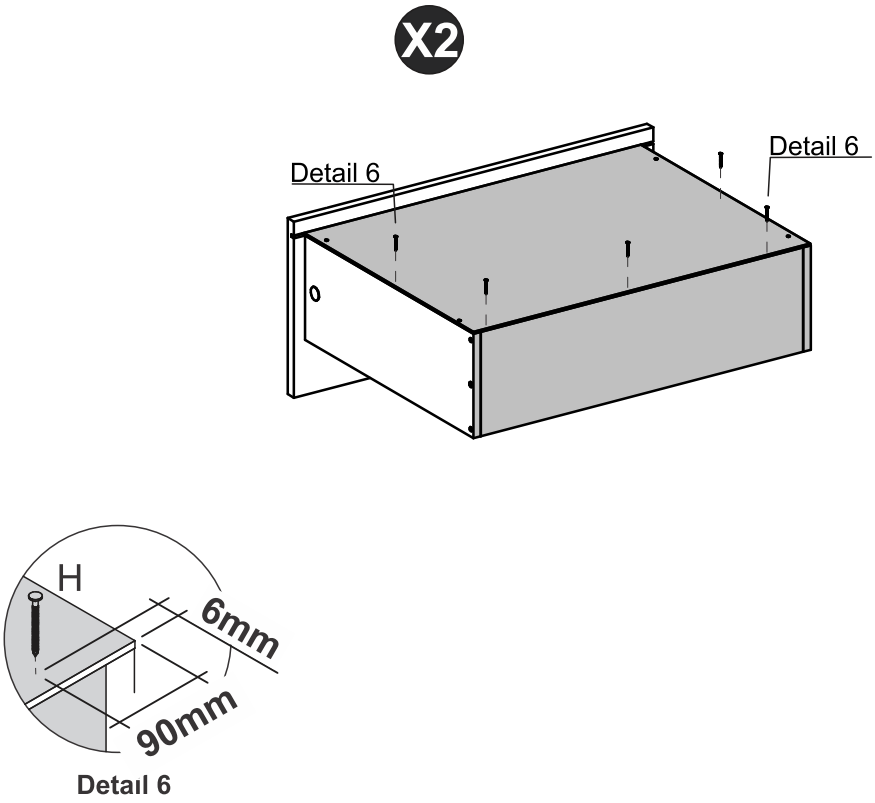

STEP 29

PARTS REQUIRED

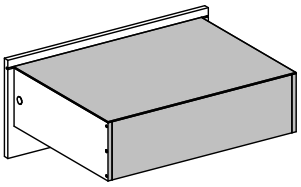

HARDWARE REQUIRED

C	Ø4,0 x 14mm	08
Q	LEFT	02
Q	RIGHT	02

TOOLS REQUIRED

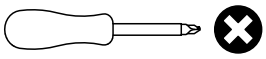

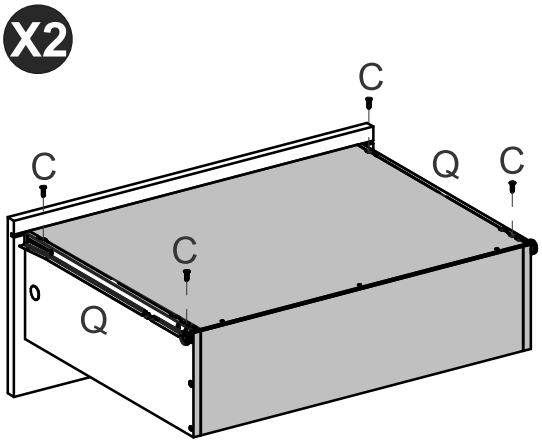

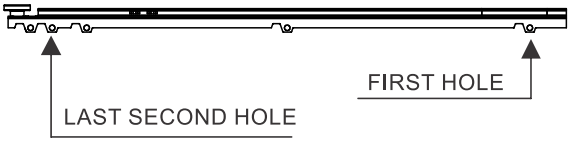

STEP 30

PARTS REQUIRED

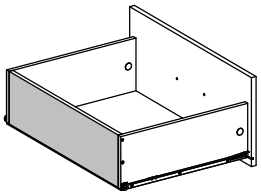

HARDWARE REQUIRED

D	Ø4,0 x 20mm	04
T		02

TOOLS REQUIRED

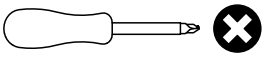

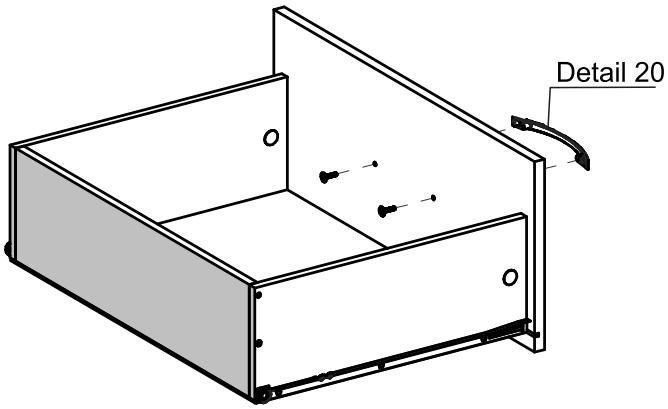

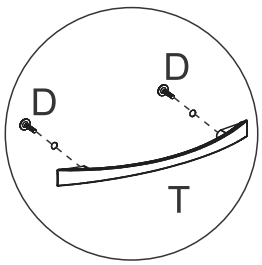

Detail 20

STEP 31

PARTS REQUIRED

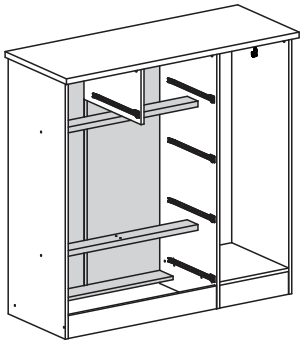

HARDWARE REQUIRED

A1		01

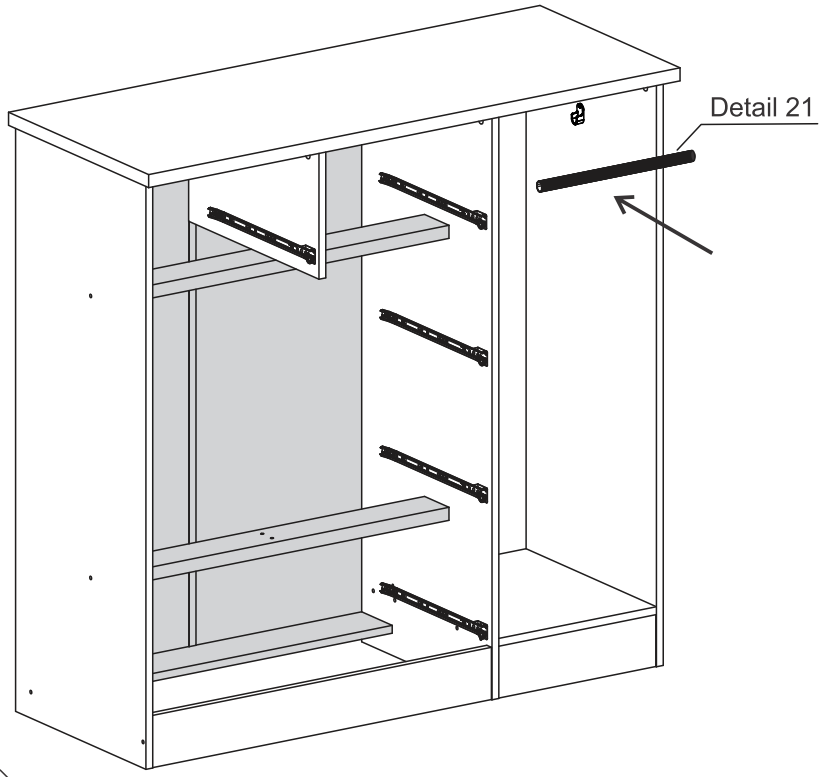

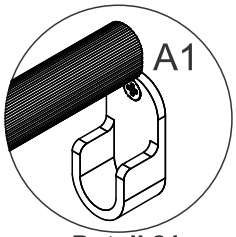

Detail 21

STEP 32

PARTS REQUIRED

11 - DOOR	x1

HARDWARE REQUIRED

C	Ø4,0 x 14mm	04
X		02

TOOLS REQUIRED

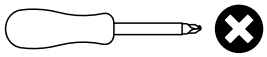

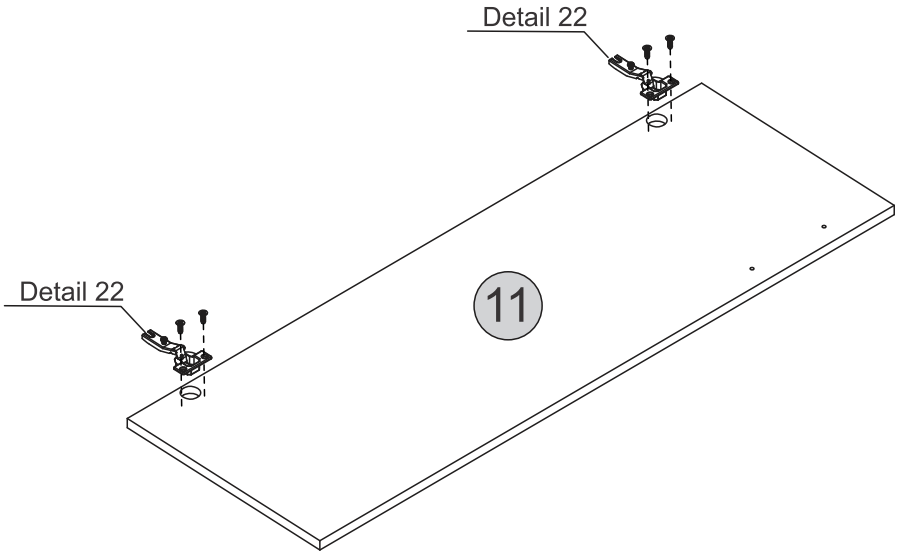

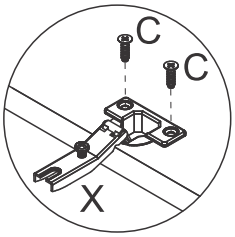

Detail 22

STEP 33

PARTS REQUIRED

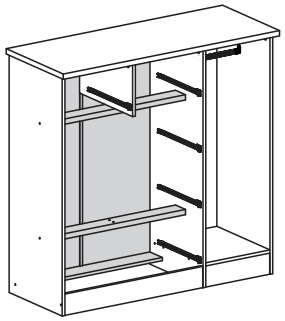

11 - DOOR	x1

HARDWARE REQUIRED

B1		06

TOOLS REQUIRED

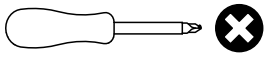

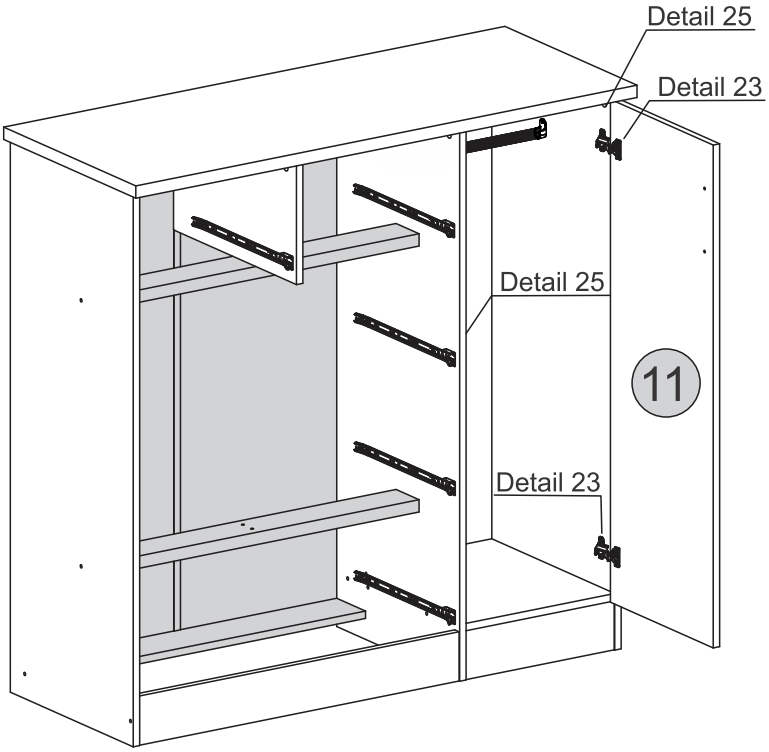

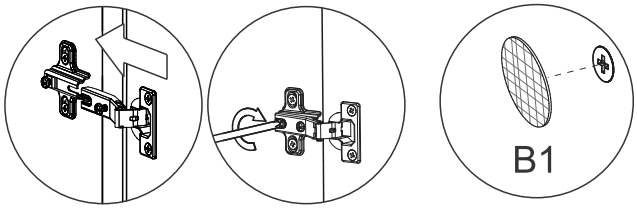

Detail 23 **Detail 25**

STEP 34

PARTS REQUIRED

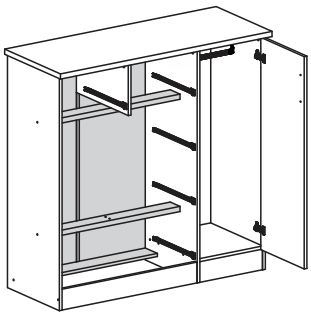

HARDWARE REQUIRED

D	Ø4,0 x 20mm	02
T		01

TOOLS REQUIRED

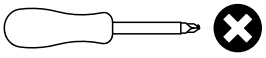

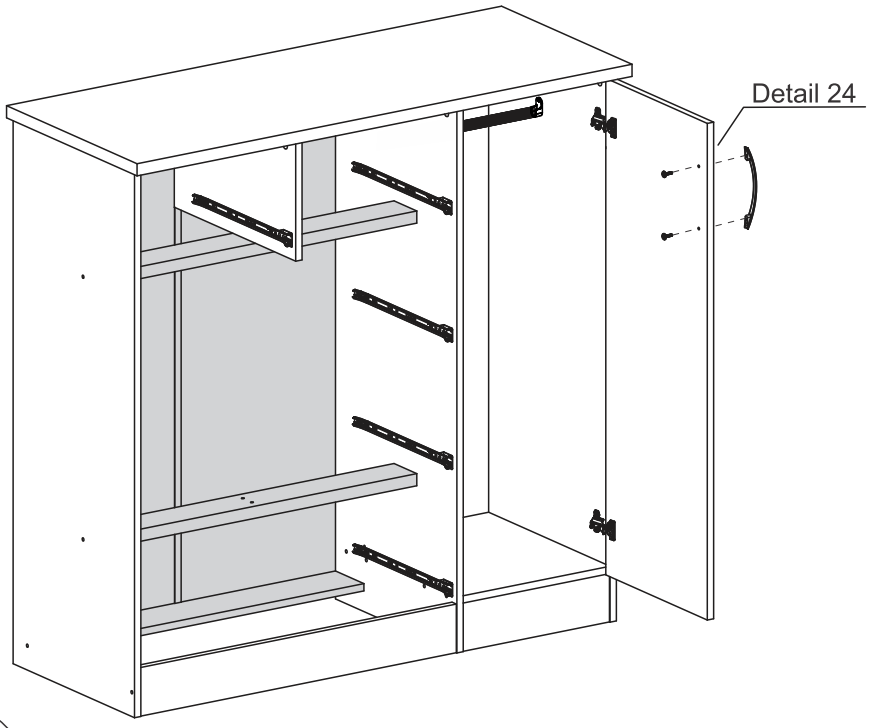

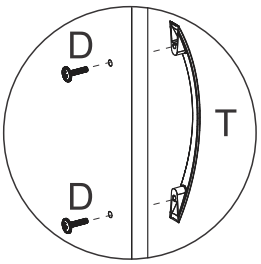

Detail 24

STEP 35

PARTS REQUIRED

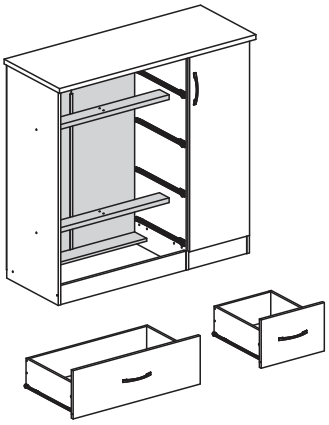

HARDWARE REQUIRED

O		07

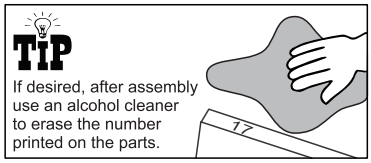

See the last page

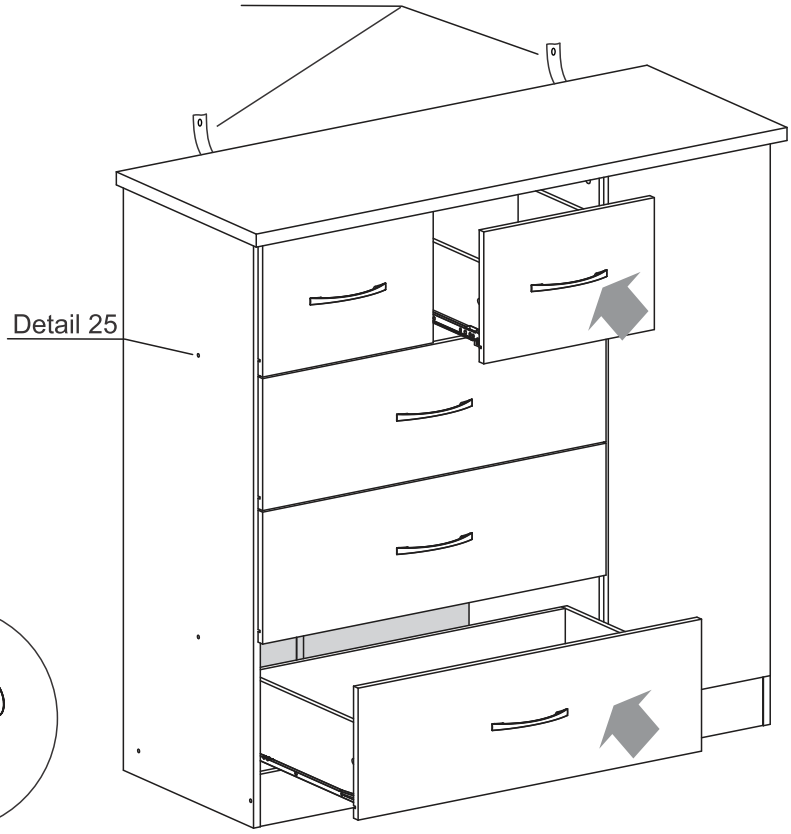

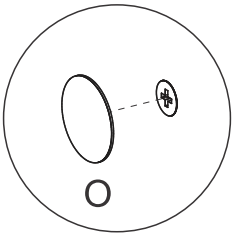

Detail 25

STEP 36

PARTS REQUIRED

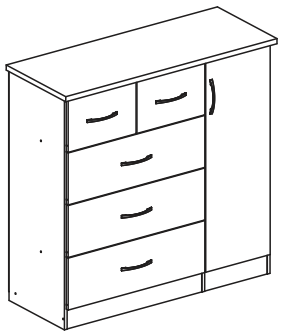

HARDWARE REQUIRED

C	Ø4,0 x 14mm	10

TOOLS REQUIRED

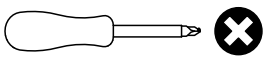

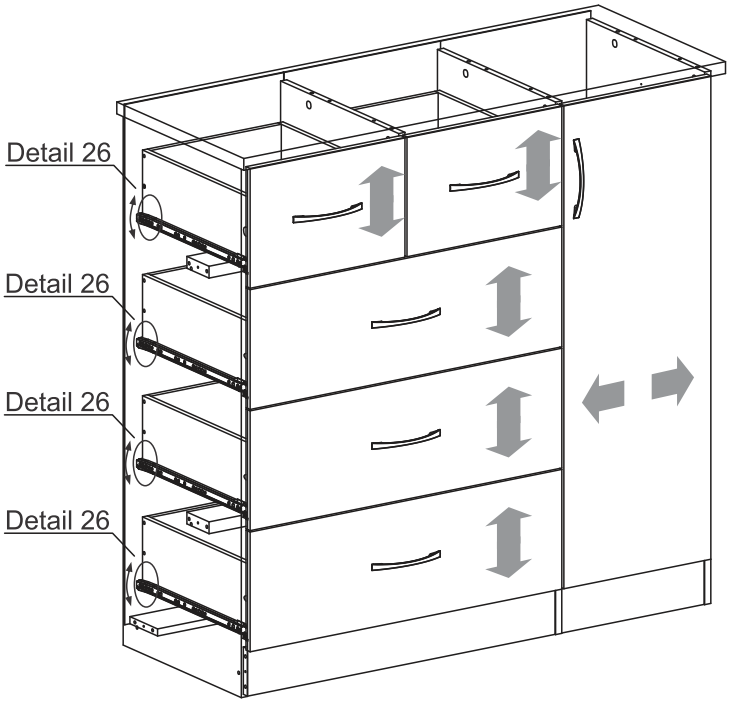

Height Adjustment

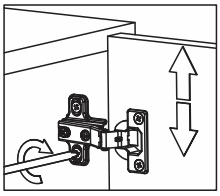

Internal Adjustment

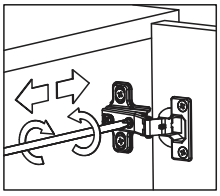

Depth Adjustment

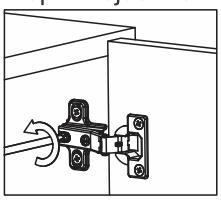

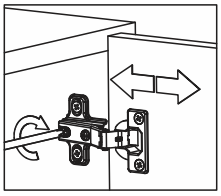

Drawer Adjustment

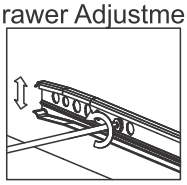

Drawer Lock

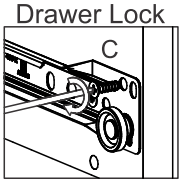

Detail 26

WARNING

Serious or fatal injuries can occur from furniture tipping over. To prevent the furniture from tipping over we recommend that it is permanently fixed to the wall.
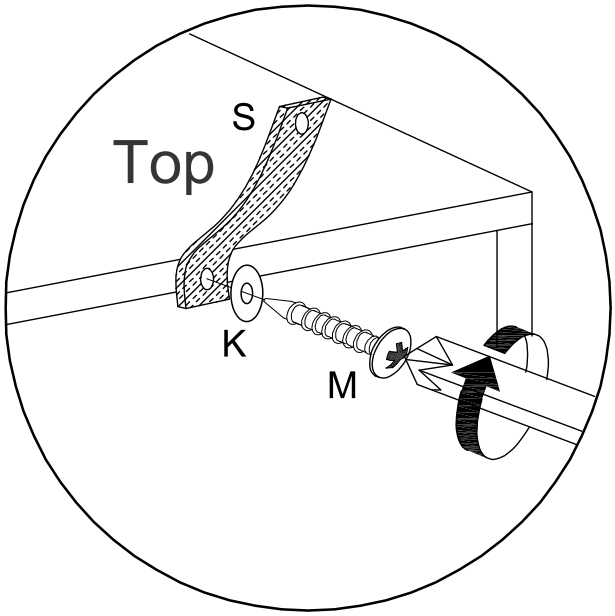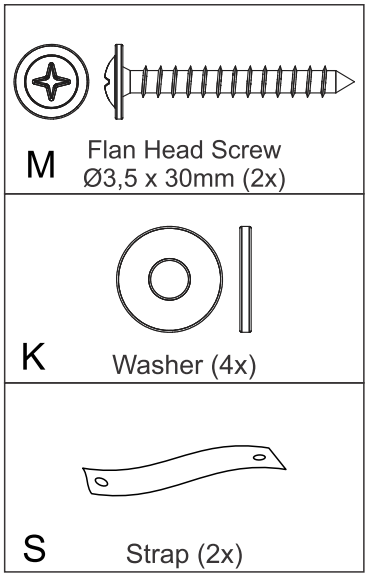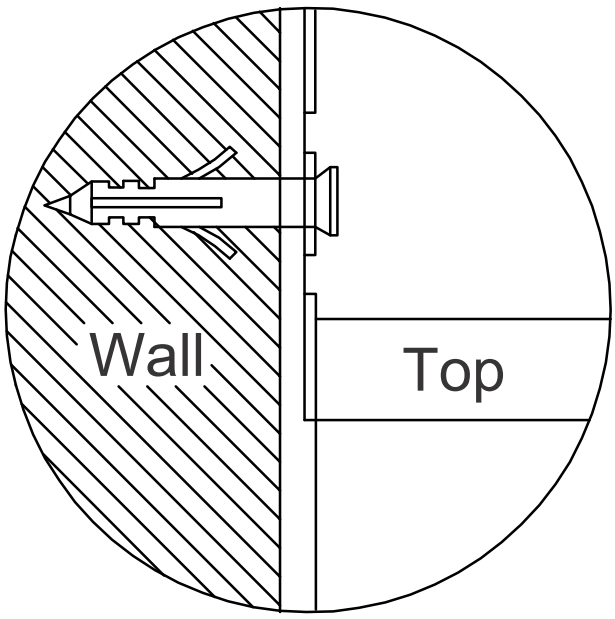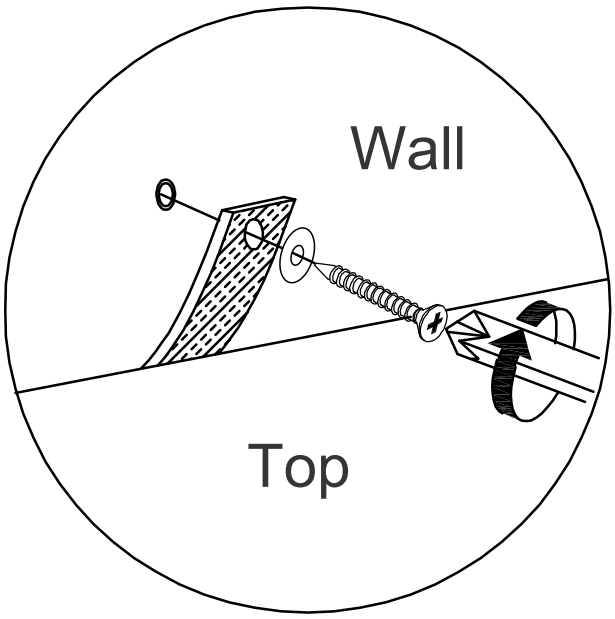
Wall fixings are not supplied with this product as different wall materials require different types of fixing devices.
Please make sure you use fixings suitable for the walls in your home.